BUILDING ENERGY ANALYSIS REPORT

PROJECT:

Prince Truck Stop
NW Corner State Rt 166 Maricopa Hwy and Hwy 99
Bakersfield, CA 93313

Project Designer:

Harbison International, Inc.
2755 E. Shaw Avenue, Suite 101
Fresno, CA 93710
559-294-7485

Report Prepared by:

Michael L. Mideiros
Home Design Service
1569 Hillsboro Ave
Madera, CA 93637-8641
559-675-8097

Job Number:

Prince Truck Stop

Date:

6/7/2011

The EnergyPro computer program has been used to perform the calculations summarized in this compliance report. This program has approval and is authorized by the California Energy Commission for use with both the Residential and Nonresidential 2008 Building Energy Efficiency Standards.

This program developed by EnergySoft, LLC – www.energysoft.com.

TABLE OF CONTENTS

Cover Page	1
Table of Contents	2
Nonresidential Performance Title 24 Forms	3
Form ENV-MM Envelope Mandatory Measures	21
Form LTG-MM Lighting Mandatory Measures	22
Form MECH-MM Mechanical Mandatory Measures	23
HVAC System Heating and Cooling Loads Summary	24

PERFORMANCE CERTIFICATE OF COMPLIANCE (Part 1 of 3) PERF-1C

Project Name	Date
Prince Truck Stop	6/7/2011

Project Address	Climate Zone	Total Cond. Floor Area	Addition Floor Area
NW Corner State Rt 166 Maricopa Hwy and Hwy 99	CA Climate Zone 13	3,717	n/a

GENERAL INFORMATION

Building Type: ☑ Nonresidential ☐ High-Rise Residential ☐ Hotel/Motel Guest Room ☐ Relocatable - indicate ☐ specific climate zone ☐ all climates

Phase of Construction: ☑ New Construction ☐ Addition ☐ Alteration

STATEMENT OF COMPLIANCE

This certificate of compliance lists the building features and specifications needed to comply with Title 24, Parts 1 and 6 of the California Code of Regulations. This certificate applies only to a Building using the performance compliance approach.

The documentation author hereby certifies that the documentation is accurate and complete.

Documentation Author

Name	Michael L. Mideiros	Signature	
Company	Home Design Service	Date	6/7/2011
Address	1569 Hillsboro Ave	Phone	559-675-8097
City/State/Zip	Madera, CA 93637-8641		

The Principal Designer hereby certifies that the proposed building design represented in this set of construction documents is consistent with the other compliance forms and worksheets, with the specifications, and with any other calculations submitted with this permit application. The proposed building has been designed to meet the energy efficiency requirements contained in sections 110, 116 through 118, and 140 through 149 of Title 24, Part 6. Please check one:

ENV.	LTG.	MECH.	
☐	☐	☐	I hereby affirm that I am eligible under the provisions of Division 3 of the Business and Professions Code to sign this document as the person responsible for its preparation; and that I am licensed in the State of California as a civil engineer, mechanical engineer, electrical engineer, or I am a licensed architect.
☐	☐	☐	I affirm that I am eligible under the provisions of Division 3 of the Business and Professions Code by section 5537.2 or 6737.3 to sign this document as the person responsible for its preparation; and that I am a licensed contractor performing this work.
☐	☐	☐	I affirm that I am eligible under Division 3 of the Business and Professions Code to sign this document because it pertains to a structure or type of work described as exempt pursuant to Business and Professions Code Sections 5537, 5538 and 6737.1.

Principal Envelope Designer

Name	Dale Winn, P.E.	Signature	
Company	Harbison International, Inc.	Date	
Address	2755 E. Shaw Avenue, Suite 101	License #	
City/State/Zip	Fresno, CA 93710	Phone	559-294-7485

Principal Mechanical Designer

Name	Dale Winn, P.E.	Signature	
Company	Harbison International, Inc.	Date	
Address	2755 E. Shaw Avenue, Suite 101	License #	
City/State/Zip	Fresno, CA 93710	Phone	559-294-7485

Principal Lighting Designer

Name	Dale Winn, P.E.	Signature	
Company	Harbison International, Inc.	Date	
Address	2755 E. Shaw Avenue, Suite 101	License #	
City/State/Zip	Fresno, CA 93710	Phone	559-294-7485

INSTRUCTIONS TO APPLICANT COMPLIANCE & WORKSHEETS (check box if worksheets are included)

☑	ENV-1C	Certificate of Compliance. Required on plans.	☑	MECH-1C	Certificate of Compliance. Required on plans.
☑	LTG-1C	Certificate of Compliance. Required on plans.	☑	MECH-2C	Air/Water Side/Service Hot Water & Pool Requirements.
☐	LTG-2C	Lighting Controls Credit Worksheet.	☑	MECH-3C	Mechanical Ventilation and Reheat.
☐	LTG-3C	Indoor Lighting Power Allowance.	☑	MECH-5C	Mechanical Equipment Details

PERFORMANCE CERTIFICATE OF COMPLIANCE (Part 2 of 3) PERF-1C

Project Name	Date
Prince Truck Stop	6/7/2011

ANNUAL TDV ENERGY USE SUMMARY (kBtu/sqft-yr)

Energy Component	Standard Design	Proposed Design	Compliance Margin
Space Heating	0.69	7.17	-6.49
Space Cooling	222.08	196.35	25.73
Indoor Fans	30.42	32.22	-1.80
Heat Rejection	0.00	0.00	0.00
Pumps & Misc.	0.00	0.00	0.00
Domestic Hot Water	31.10	30.32	0.79
Lighting	162.93	114.66	48.27
Receptacle	80.80	80.80	0.00
Process	80.80	80.80	0.00
Process Lighting	0.00	0.00	0.00
TOTALS	608.81	542.31	66.50
Percent better than Standard		10.9 %	(12.6 % excluding process)

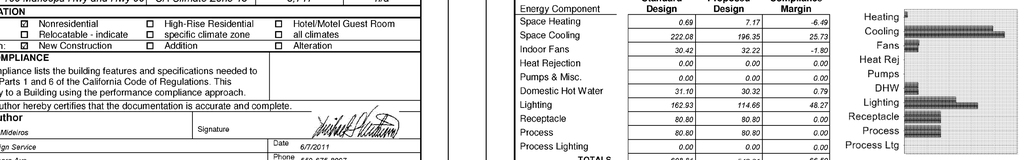

BUILDING COMPLIES

GENERAL INFORMATION

Building Orientation	(S) 180 deg		Conditioned Floor Area	3,717	sqft.
Number of Stories	1		Unconditioned Floor Area	1,197	sqft.
Number of Systems	2		Conditioned Footprint Area	3,717	sqft.
Number of Zones	2		Natural Gas Available On Site	Yes	

	Orientation	Gross Area		Glazing Area		Glazing Ratio
Front Elevation	(S)	741	sqft.	213	sqft.	28.7 %
Left Elevation	(W)	819	sqft.	0	sqft.	0.0 %
Rear Elevation	(N)	741	sqft.	0	sqft.	0.0 %
Right Elevation	(E)	0	sqft.	0	sqft.	0.0 %
Total		2,301	sqft.	213	sqft.	9.3 %
Roof		3,717	sqft.	0	sqft.	0.0 %

	Standard		Proposed		
Prescriptive Lighting Power Density	1.600	W/sqft.	1.126	W/sqft.	Prescriptive Values for Comparison only. See LTG-1C for allowed LPD.
Prescriptive Envelope TDV Energy	72,331		130,855		

Remarks:

PERFORMANCE CERTIFICATE OF COMPLIANCE (Part 3 of 3) PERF-1C

Project Name	Date
Prince Truck Stop	6/7/2011

ZONE INFORMATION

System Name	Zone Name	Occupancy Type	Floor Area (sqft.)	Inst. LPD (W/sf)[1]	Ctrl. Credits (W/sf)[2]	Allowed LPD Area (W/sf)[3]	Allowed LPD Tailored (W/sf)[4]	Proc. Loads (W/sf)
Minimart HVAC Systems	Minimart	Retail Sales, Wholesale	3,717	1.126				1.000
	Future Tenant Lease	Tenant Lease Space	1,197	0.000				

Notes: 1: See LTG-1C (items marked with asterisk, see LTG-1.C by others) 2: See LTG-2C 3: See LTG-3C (by others) 4: See LTG-4C Items above require special documentation

EXCEPTIONAL CONDITIONS COMPLIANCE CHECKLIST

The local enforcement agency should pay special attention to the items specified in this checklist. These items require special written justification and documentation, and special verification to be used with the performance approach. The local enforcement agency determines the adequacy of the justifications, and may reject a building or design that otherwise complies based on the adequacy of the special justification and documentation submitted.

The HVAC System Minimart HVAC Systems incorporates HERS verified Duct Leakage. Target leakage is calculated and documented on the MECH-4-A.

The exceptional features listed in this performance approach application have specifically been reviewed. Adequate written justification and documentation for their use have been provided by the applicant.

Authorized Signature or Stamp _____

CERTIFICATE OF COMPLIANCE AND FIELD INSPECTION ENERGY CHECKLIST (Part 1 of 3) ENV-1C

Project Name	Date
Prince Truck Stop	6/7/2011

Project Address	Climate Zone	Total Cond. Floor Area	Addition Floor Area
NW Corner State Rt 166 Maricopa Hwy and Hwy 99	13	3,717	n/a

GENERAL INFORMATION

Building Type: ☑ Nonresidential ☐ High-Rise Residential ☐ Hotel/Motel Guest Room ☐ Schools (Public School) ☐ Relocatable Public School Bldg. ☑ Conditioned Spaces ☐ Unconditioned Spaces

☐ Skylight Area for Large Enclosed Space ≥ 8000 ft² (If checked include the ENV-4C with submittal)

Phase of Construction: ☑ New Construction ☐ Addition ☐ Alteration

Approach of Compliance: ☐ Component ☑ Overall Envelope ☐ Unconditioned (file affidavit)

Front Orientation: N, E, S, W or in Degrees: *180 deg*

FIELD INSPECTION ENERGY CHECKLIST

OPAQUE SURFACE DETAILS — **INSULATION**

Tag/ID	Assembly Type	Area (ft²)	Orientation N, E, S, W	U-Factor	Cavity R-Value	Exterior R-Value	Exterior Furring[1]	Interior R-Value	Interior Furring	Joint Appendix 4	Condition Status	Pass	Fail[2]
1	Wall	528	(S)	0.074	R-19					4.3.1-A5	New	☐	☐
2	Wall	819	(W)	0.074	R-19					4.3.1-A5	New	☐	☐
3	Wall	720	(N)	0.074	R-19					4.3.1-A5	New	☐	☐
4	Door	21	(N)	0.500	None					4.5.1-A4	New	☐	☐
5	Roof	3,717	(N)	0.059	R-19					4.2.2-A30	New	☐	☐
6	Slab	3,717	(N)	0.730	None					4.4.7-A1	New	☐	☐
7	Demising	819	(N)	0.074	R-19					4.3.1-A5	New	☐	☐
												☐	☐
												☐	☐
												☐	☐

1. See Instructions in the Nonresidential Compliance Manual, page 3-96.
2. If Fail, then describe on Page 2 of the Inspection Checklist Form and take appropriate action to correct. A fail does not meet compliance.

FENESTRATION SURFACE DETAILS

Tag/ID	Fenestration Type	Area (ft²)	Orientation N, E, S, W	Max. U-Factor	U-Factor Source	Max (SHGC)	SHGC Source	Overhang	Conditions Status	Pass	Fail[2]
1	Window	86	(S)	1.190	Default	0.680	Default	☐	New	☐	☐
2	Window	32	(S)	1.190	Default	0.680	Default	☑	New	☐	☐
3	Window	56	(S)	1.250	Default	0.680	Default	☑	New	☐	☐
4	Window	8	(S)	1.190	Default	0.680	Default	☑	New	☐	☐
5	Window	32	(S)	1.190	Default	0.680	Default	☑	New	☐	☐
								☐		☐	☐
								☐		☐	☐
								☐		☐	☐
								☐		☐	☐
								☐		☐	☐

1. See Instructions in the Nonresidential Compliance Manual, page 3-96.
2. If Fail then describe on Page 2 of the Inspection Checklist Form and take appropriate action to correct. Verify building plans if necessary.

CERTIFICATE OF COMPLIANCE AND FIELD INSPECTION ENERGY CHECKLIST (Part 2 of 3) ENV-1C

Project Name	Date
Prince Truck Stop	6/7/2011

ROOFING PRODUCT (COOL ROOFS)

(Note if the roofing product is not CRRC certified, this compliance approach cannot be used). Go to Overall Envelope Approach or Performance Approach.

CHECK APPLICABLE BOX BELOW IF EXEMPT FROM THE ROOFING PRODUCT "COOL ROOF" REQUIREMENTS:	Pass	Fail[1]	N/A
☐ Roofing compliance not required in Climate Zones 1 and16 with a Low-Sloped 2:12 pitch or less.	☐	☐	☐
☐ Roofing compliance not required in Climate Zone 1 with a Steep-Sloped with less than 5 lb/ft². Greater than 2:12 pitch.	☐	☐	☐
☐ Low-sloped Wood framed roofs in Climate Zones 3 and 5 are exempted, solar reflectance and thermal emittance or SRI that have a U-factor of 0.039 or lower. See Opaque Surface Details roof assembly, Column H of ENV-2C.	☐	☐	☐
☐ Low-sloped Metal building roofs in Climate Zone 3 and 5 are exempted, solar reflectance and thermal emittance or SRI that have a U-factor of 0.048 or lower. See Opaque Surface Details roof assembly below, Column H of ENV-2C.	☐	☐	☐
☐ The roof area covered by building integrated photovoltaic panels and building integrated solar thermal panels are exempted. Solar reflectance and thermal emittance or SRI, see spreadsheet calculator at www.energy.ca.gov/title24/	☐	☐	☐
☐ Roof constructions that have thermal mass over the roof membrane with a weight of at least 25 lb/ft² are exempt from the Cool Roof criteria below.	☐	☐	☐
☐ High-rise residential buildings and hotels and motels with low-sloped roofs in Climate Zones 1 through 9, 12 and 16 are exempted from the low-sloped roofing criteria.	☐	☐	☐

1. If Fail then describe on this page of the Inspection Checklist Form and take appropriate action to correct. Verify building plans if necessary.

CRRC Product ID Number[1]	Roof Slope ≤ 2:12	Roof Slope > 2:12	Product Weight < 5lb/ft²	Product Weight ≥ 5lb/ft²	Product Type[2]	Aged Solar Reflectance[3]	Thermal Emittance	SRI[5]	Pass	Fail[6]
	☐	☐	☐	☐		☐ [4]			☐	☐
	☐	☐	☐	☐		☐ [4]			☐	☐
	☐	☐	☐	☐		☐ [4]			☐	☐
	☐	☐	☐	☐		☐ [4]			☐	☐
	☐	☐	☐	☐		☐ [4]			☐	☐

1. The CRRC Product ID Number can be obtained from the Cool Roof Rating Council's Rated Product Directory at www.coolroofs.org/products/search.php
2. Indicate the type of product is being used for the roof top, i.e. single-ply roof, asphalt roof, metal roof, etc.
3. If the Aged Reflectance is not available in the Cool Roof Rating Council's Rated Product Directory then use the Initial Reflectance value from the same directory and use the equation $(0.2+0.7(\rho_{initial}-0.2))$ to obtain a calculated aged value. Where **ρ** is the Initial Solar Reflectance from the Cool Roof Rating Council's Rated Product Directory.
4. Check box if the Aged Reflectance is a calculated value using the equation above.
5. The SRI value needs to be calculated from a spreadsheet calculator at http://www.energy.ca.gov/title24/
6. If Fail then describe on this page of the Inspection Checklist Form and take appropriate action to correct. Verify building plans if necessary.

To apply **Liquid Field Applied Coatings**, the coating must be applied across the entire roof surface and meet the dry mil thickness or coverage recommended by the coatings manufacturer and meet minimum performance requirements listed in §118(i)4. Select the applicable coating:

☐ Aluminum-Pigmented Asphalt: Roof Coating ☐ Cement-Based Roof Coating ☐ Other _____

Discrepancies:

HOME DESIGN SERVICE
MICHAEL L. MIDEIROS
1569 HILLSBORO AVENUE
MADERA, CALIFORNIA 93637-8641
(559) 675-8097

PREPARED BY: MIDEIROS
DATE: 06/07/2011
JOB NAME: PRINCE TRUCK STOP
LOCATION: BAKERSFIELD
CLIMATE ZONE: CZ 13
SHEET: T24-1

CERTIFICATE OF COMPLIANCE AND FIELD INSPECTION ENERGY CHECKLIST (Part 3 of 3) ENV-1C

Project Name	Date
Prince Truck Stop	*6/7/2011*

Required Acceptance Tests

Designer:

This form is to be used by the designer and attached to the plans. Listed below is the acceptance test for Envelope Fenestrations system. The designer is required to check the acceptance tests and list all the fenestration products that require an acceptance test. If all the site-built fenestration of a certain type requires a test, list the different fenestration products and the number of systems. The NA7 Section in the Appendix of the Nonresidential Reference Appendices Manual describes the test. Since this form will be part of the plans, completion of this section will allow the responsible party to budget for the scope of work appropriately.

Enforcement Agency:

Systems Acceptance. Before Occupancy Permit is granted for a newly constructed building or space or whenever new fenestration is installed in the building or space shall be certified as meeting the Acceptance Requirements.
The ENV-2A form is not considered a complete form and is not to be accepted by the enforcement agency unless the boxes are checked and/or filled and signed. In addition, a Certificate of Acceptance forms shall be submitted to the enforcement agency that certifies plans, specifications, installation certificates, and operating and maintenance information meet the requirements of §10-103(b) of Title 24 Part 6. The field inspector must receive the properly filled out and signed forms before the building can receive final occupancy. A copy of the ENV-2A for each different fenestration product line must be provided to the owner of the building for their records.

Test Description		ENV-2A	Test Performed By:
Fenestration Products Name or ID Requiring Testing or Verification	Area of like Products	Building Envelope Acceptance Test	
Alum SG Tinted Fixed	*157*	☑	
Alum SG Tinted Glass Doors	*56*	☑	
		☐	
		☐	
		☐	
		☐	
		☐	
		☐	
		☐	
		☐	
		☐	
		☐	
		☐	
		☐	
		☐	
		☐	
		☐	
		☐	
		☐	
		☐	
		☐	
		☐	
		☐	
		☐	
		☐	
		☐	

CERTIFICATE OF COMPLIANCE (Part 1 of 3) LTG-1C

Project Name	Date
Prince Truck Stop	*6/7/2011*

INDOOR LIGHTING SCHEDULE and FIELD INSPECTION ENERGY CHECKLIST

Installation Certificate, LTG-1- INST (Retain a copy and verify form is completed and signed.) **Field Inspector** ☐

Certificate of Acceptance, LTG-2A and LTG-3A (Retain a copy and verify form is completed and signed.) **Field Inspector** ☐

A separate Lighting Schedule Must Be Filled Out for Conditioned and Unconditioned Spaces Installed Lighting Power listed on this Lighting Schedule is only for:

☑ **CONDITIONED SPACE** ☐ **UNCONDITIONED SPACE**

☑ The actual indoor lighting power listed below includes all installed permanent and portable lighting systems in accordance with §146(a).

☑ Only for offices: Up to the first 0.2 watts per square foot of portable lighting shall not be required to be included in the calculation of actual indoor lighting power density in accordance with the Exception to §146(a). All portable lighting in excess of 0.2 watts per square foot is totaled below.

Luminaire (Type, Lamps, Ballasts)		Installed Watts							
A	B	C	D	E		F	G	H	
				How wattage Was determined				Field Inspector[2]	
None or Item Tag	Complete Luminaire Description[1] (i.e, 3 lamp fluorescent troffer, F32T8, one dimmable electronic ballasts)		Watts per Luminaire[1]	CEC Default From NA8	According To §130 (d or e)	Number of Luminaires	Installed Watts (D X F)	Pass	Fail
A	*(3) 4 ft Fluorescent T8 (Tandem) Elec*		*93.0*	☑	☐	*45*	*4,185*	☐	☐
				☐	☐			☐	☐
				☐	☐			☐	☐
				☐	☐			☐	☐
				☐	☐			☐	☐
				☐	☐			☐	☐
				☐	☐			☐	☐
				☐	☐			☐	☐
				☐	☐			☐	☐
				☐	☐			☐	☐
				☐	☐			☐	☐
				☐	☐			☐	☐
				☐	☐			☐	☐
				☐	☐			☐	☐
				☐	☐			☐	☐
				☐	☐			☐	☐
				☐	☐			☐	☐
				☐	☐			☐	☐
				☐	☐			☐	☐
				☐	☐			☐	☐
					Installed Watts Page Total:		*4,185*		
Building total number of pages:				Installed Watts Building Total (Sum of all pages) Enter into LTG-1C Page 4 of 4			*4,185*		

1. Wattage shall be determined according to Section 130 (d and e). Wattage shall be rating of light fixture, not rating of bulb.
2. If Fail then describe on Page 2 of the Inspection Checklist Form and take appropriate action to correct. Verify building plans if necessary.

CERTIFICATE OF COMPLIANCE (Part 2 of 3) LTG-1C

Project Name	Date
Prince Truck Stop	*6/7/2011*

INDOOR LIGHTING SCHEDULE and FIELD INSPECTION ENERGY CHECKLIST

Fill in controls for all spaces: a) area controls, b) multi-level controls, c) manual daylighting controls for daylit areas > 250 ft^2, automatic daylighting controls for daylit areas > 2,500 ft^2, d) shut-off controls, e) display lighting controls, f) tailored lighting controls – general lighting controlled separately from display, ornamental and display case lighting and g) demand responsive automatic controls for retail stores > 50,000 ft^2, in accordance with Section 131.

MANDATORY LIGHTING CONTROLS – FIELD INSPECTION ENERGY CHECKLIST

Type/ Description	Number of Units	Location in Building	Special Features	Field Inspector Pass	Field Inspector Fail
			☐	☐	☐
			☐	☐	☐
			☐	☐	☐
			☐	☐	☐
			☐	☐	☐
			☐	☐	☐
			☐	☐	☐
			☐	☐	☐
			☐	☐	☐
			☐	☐	☐
			☐	☐	☐
			☐	☐	☐
			☐	☐	☐
			☐	☐	☐
			☐	☐	☐
			☐	☐	☐
			☐	☐	☐
			☐	☐	☐
			☐	☐	☐
			☐	☐	☐
			☐	☐	☐
			☐	☐	☐
			☐	☐	☐
			☐	☐	☐

SPECIAL FEATURES INSPECTION CHECKLIST (See Page 2 of 4 of LTG-1C)

The local enforcement agency should pay special attention to the items specified in this checklist. These items require special written justification and documentation, and special verification. The local enforcement agency determines the adequacy of the justification, and may reject a building or design that otherwise complies based on the adequacy of the special justification and documentation submitted.

Field Inspector's Notes or Discrepancies:

CERTIFICATE OF COMPLIANCE (Part 3 of 3) LTG-1C

Project Name	Date
Prince Truck Stop	*6/7/2011*

CONDITIONED AND UNCONDITIONED SPACE LIGHTING MUST NOT BE COMBINED FOR COMPLIANCE

Indoor Lighting Power for Conditioned Spaces		Watts	Indoor Lighting Power for Unconditioned Spaces		Watts
Installed Lighting (from Conditioned LTG-1C, Page 2)		*4,185*	**Installed** Lighting (from Unconditioned LTG-1C, Page 2)		*0*
Lighting Control Credit Conditioned Spaces (from LTG-2C)	-	*0*	Lighting Control Credit Unconditioned Spaces (from LTG-2C)	-	*0*
Adjusted **Installed** Lighting Power	=	*4,185*	Adjusted **Installed** Lighting Power	=	*0*
Complies if **Installed ≤ Allowed**		↕	Complies if **Installed ≤ Allowed**		↕
Allowed Lighting Power Conditioned Spaces (from LTG-3C or PERF-1)		*4,185*	**Allowed** Lighting Power Unconditioned Spaces (from LTG-3C)		*1,796*

Required Acceptance Tests

Designer:

This form is to be used by the designer and attached to the plans. Listed below is the acceptance test for the Lighting system, **LTG-2A and LTG-3A**. The designer is required to check the acceptance tests and list all control devices serving the building or space shall be certified as meeting the Acceptance Requirements for Code Compliance. If all the lighting system or control of a certain type requires a test, list the different lighting and the number of systems. The NA7 Section in the Appendix of the Nonresidential Reference Appendices Manual describes the test. Since this form will be part of the plans, completion of this section will allow the responsible party to budget for the scope of work appropriately. **Forms can be grouped by type of Luminaire controlled.**

Enforcement Agency:

Systems Acceptance. Before Occupancy Permit is granted for a newly constructed building or space or when ever new lighting system with controls is installed in the building or space shall be certified as meeting the Acceptance Requirements.
The **LTG-2A and LTG-3A** forms are not considered complete forms and are not to be accepted by the enforcement agency unless the boxes are checked and/or filled and signed. In addition, a Certificate of Acceptance forms shall be submitted to the enforcement agency that certifies plans, specifications, installation certificates, and operating and maintenance information meet the requirements of §10-103(b) of Title 24 Part 6. The field inspector must receive the properly filled out and signed forms before the building can receive final occupancy. A copy of the **LTG-2A and LTG-3A** for each different lighting luminaire control(s) must be provided to the owner of the building for their records.

Luminaires Controlled				LTG-2A and LTG-3A
Equipment Requiring Testing	Description	Number of Luminaires controlled	Location	Controls and Sensors and Automatic Daylighting Controls Acceptance
				☐
				☐
				☐
				☐
				☐
				☐
				☐
				☐
				☐
				☐
				☐
				☐
				☐
				☐
				☐
				☐

CERTIFICATE OF COMPLIANCE and FIELD INSPECTION ENERGY CHECKLIST (Part 1 of 4) MECH-1C

Project Name			Date
Prince Truck Stop			*6/7/2011*
Project Address	Climate Zone	Total Cond. Floor Area	Addition Floor Area
NW Corner State Rt 166 Maricopa Hwy and Hwy 99	*13*	*3,717*	*n/a*

GENERAL INFORMATION

Building Type:	☑ Nonresidential	☐ High-Rise Residential	☐ Hotel/Motel Guest Room
☐ Schools (Public School)	☐ Relocatable Public School Bldg.	☑ Conditioned Spaces	☐ Unconditioned Spaces (affidavit)
Phase of Construction:	☑ New Construction	☐ Addition	☐ Alteration
Approach of Compliance:	☐ Component	☐ Overall Envelope TDV Energy	☐ Unconditioned (file affidavit)
Front Orientation: N, E, S, W or in Degrees:	*180 deg*		

HVAC SYSTEM DETAILS

Equipment[2]	Inspection Criteria	FIELD INSPECTION ENERGY CHECKLIST Meets Criteria or Requirements: Pass	Fail – Describe Reason[2]
Item or System Tags (i.e. AC-1, RTU-1, HP-1)	*DHW Heater*	☐	☐
Equipment Type[3]:	*Gas Fired DHW Boiler*	☐	☐
Number of Systems	*1*	☐	☐
Max Allowed Heating Capacity[1]	*40,000 Btu/hr*	☐	☐
Minimum Heating Efficiency[1]	*0.59 EF*	☐	☐
Max Allowed Cooling Capacity[1]	*n/a*	☐	☐
Cooling Efficiency[1]	*n/a*	☐	☐
Duct Location/ R-Value	*n/a*	☐	☐
When duct testing is required, submit **MECH-4A** & **MECH-4-HERS**	*n/a*	☐	☐
Economizer	*n/a*	☐	☐
Thermostat	*n/a*	☐	☐
Fan Control	*n/a*	☐	☐

Equipment[2]	Inspection Criteria	FIELD INSPECTION ENERGY CHECKLIST: Pass	Fail – Describe Reason[2]
Item or System Tags (i.e. AC-1, RTU-1, HP-1)	*Minimart HVAC Systems*	☐	☐
Equipment Type[3]:	*Packaged DX*	☐	☐
Number of Systems	*2*	☐	☐
Max Allowed Heating Capacity[1]	*59,200 Btu/hr*	☐	☐
Minimum Heating Efficiency[1]	*80% AFUE*	☐	☐
Max Allowed Cooling Capacity[1]	*61,000 Btu/hr*	☐	☐
Cooling Efficiency[1]	*13.0 SEER / 11.0 EER*	☐	☐
Duct Location/ R-Value	*Conditioned / 4.2*	☐	☐
When duct testing is required, submit **MECH-4A** & **MECH-4-HERS**	*Yes*	☐	☐
Economizer	*No Economizer*	☐	☐
Thermostat	*Setback Required*	☐	☐
Fan Control	*Constant Volume*	☐	☐

1. If the Actual installed equipment performance efficiency and capacity is less than the Proposed (from the energy compliance submittal or from the building plans) the responsible party shall resubmit energy compliance to include the new changes.
2. For additional detailed discrepancy use Page 2 of the Inspection Checklist Form. Compliance fails if a Fail box is checked.
3. Indicate Equipment Type: Gas (Pkg or, Split), VAV, HP (Pkg or split), Hydronic, PTAC, or other.

CERTIFICATE OF COMPLIANCE and FIELD INSPECTION ENERGY CHECKLIST (Part 2 of 4) MECH-1C

Project Name	Date
Prince Truck Stop	*6/7/2011*

Discrepancies:

CERTIFICATE OF COMPLIANCE and FIELD INSPECTION ENERGY CHECKLIST (Part 3 of 4) MECH-1C

Project Name	Date
Prince Truck Stop	*6/7/2011*

Required Acceptance Tests

Designer:

This form is to be used by the designer and attached to the plans. Listed below are all the acceptance tests for mechanical systems. The designer is required to check the applicable boxes by all acceptance tests that apply and listed all equipment that requires an acceptance test. If all equipment of a certain type requires a test, list the equipment description and the number of systems. The NA number designates the Section in the Appendix of the Nonresidential Reference Appendices Manual that describes the test. Since this form will be part of the plans, completion of this section will allow the responsible party to budget for the scope of work appropriately.

Building Departments:

Systems Acceptance: Before occupancy permit is granted for a newly constructed building or space, or a new space-conditioning system serving a building or space is operated for normal use, all control devices serving the building or space shall be certified as meeting the Acceptance Requirements for Code Compliance.
Systems Acceptance: Before occupancy permit is granted. All newly installed HVAC equipment must be tested using the Acceptance Requirements.

The MECH-1C form is not considered a completed form and is not to be accepted by the building department unless the correct boxes are checked. The equipment requiring testing, person performing the test (Example: HVAC installer, TAB contractor, controls contractor, PE in charge of project) and what Acceptance test must be conducted. The following checked-off forms are required for **ALL** newly installed equipment. In addition a Certificate of Acceptance forms shall be submitted to the building department that certifies plans, specifications, installation, certificates, and operating and maintenance information meet the requirements of §10-103(b) and Title-24 Part 6. The building inspector must receive the properly filled out and signed forms before the building can receive final occupancy.

TEST DESCRIPTION		MECH-2A	MECH-3A	MECH-4A	MECH-5A	MECH-6A	MECH-7A	MECH-8A	MECH-9A	MECH-10A	MECH-11A
Equipment Requiring Testing or Verification	Qty.	Outdoor Ventilation For VAV & CAV	Constant Volume & Single-Zone Unitary	Air Distribution Ducts	Economizer Controls	Demand Control Ventilation DCV	Supply Fan VAV	Valve Leakage Test	Supply Water Temp. Reset	Hydronic System Variable Flow Control	Automatic Demand Shed Control
Carrier 48HJD006	*2*	☐	☑	☑	☐	☐	☐	☐	☐	☐	☑
		☐	☐	☐	☐	☐	☐	☐	☐	☐	☐
		☐	☐	☐	☐	☐	☐	☐	☐	☐	☐
		☐	☐	☐	☐	☐	☐	☐	☐	☐	☐
		☐	☐	☐	☐	☐	☐	☐	☐	☐	☐
		☐	☐	☐	☐	☐	☐	☐	☐	☐	☐
		☐	☐	☐	☐	☐	☐	☐	☐	☐	☐
		☐	☐	☐	☐	☐	☐	☐	☐	☐	☐
		☐	☐	☐	☐	☐	☐	☐	☐	☐	☐
		☐	☐	☐	☐	☐	☐	☐	☐	☐	☐
		☐	☐	☐	☐	☐	☐	☐	☐	☐	☐
		☐	☐	☐	☐	☐	☐	☐	☐	☐	☐
		☐	☐	☐	☐	☐	☐	☐	☐	☐	☐
		☐	☐	☐	☐	☐	☐	☐	☐	☐	☐

HOME DESIGN SERVICE
MICHAEL L. MIDEIROS
1569 HILLSBORO AVENUE
MADERA, CALIFORNIA 93637-8641
(559) 675-8097

PREPARED BY	MIDEIROS
DATE	06/07/2011
JOB NAME	PRINCE TRUCK STOP
LOCATION	BAKERSFIELD
CLIMATE ZONE	CZ 13
SHEET	T24-2

CERTIFICATE OF COMPLIANCE and FIELD INSPECTION ENERGY CHECKLIST (Part 4 of 4) MECH-1C

Project Name: *Prince Truck Stop* | Date: *6/7/2011*

TEST DESCRIPTION: Equipment Requiring Testing	Qty.	MECH-12A Fault Detection & Diagnostics for DX Units	MECH-13A Automatic Fault Detection & Diagnostics for Air & Zone	MECH-14A Distributed Energy Storage DX AC Systems	MECH-15A Thermal Energy Storage (TES) Systems	Test Performed By:
Carrier 48HJD006	2	☐	☐	☐	☐	

AIR SYSTEM REQUIREMENTS (Part 1 of 2) MECH-2C

Project Name: *Prince Truck Stop* | Date: *6/7/2011*

		Indicate Air Systems Type (Central, Single Zone, Package, VAV, or etc…)		
Item or System Tags (i.e. AC-1, RTU-1, HP-1)		*Minimart HVAC Systems*		
Number of Systems		*2*		
		Indicate Page Reference on Plans or Schedule and indicate the applicable exception(s)		
MANDATORY MEASURES	**T-24 Sections**			
Heating Equipment Efficiency	112(a)	*80% AFUE*		
Cooling Equipment Efficiency	112(a)	*13.0 SEER / 11.0 EER*		
HVAC Heat Pump Thermostat	112(b), 112(c)	*n/a*		
Furnace Controls/Thermostat	112(c), 115(a)	*n/a*		
Natural Ventilation	121(b)	*Yes*		
Mechanical Ventilation	121(b)	*929 cfm*		
VAV Minimum Position Control	121(c)	*No*		
Demand Control Ventilation	121(c)	*No*		
Time Control	122(e)	*Programmable Switch*		
Setback and Setup Control	122(e)	*Setback Required*		
Outdoor Damper Control	122(f)	*Auto*		
Isolation Zones	122(g)	*n/a*		
Pipe Insulation	123			
Duct Location/ R-value	124	*Conditioned / 4.2*		
PRESCRIPTIVE MEASURES				
Calculated Design Heating Load	144(a & b)	*n/a*		
Proposed Heating Capacity	144(a & b)	*118,400 Btu/hr*		
Calculated Design Cooling Load	144(a & b)	*n/a*		
Proposed Cooling Capacity	144(a & b)	*105,882 Btu/hr*		
Fan Control	144(c)	*Constant Volume*		
DP Sensor Location	144(c)			
Supply Pressure Reset (DDC only)	144(c)	*Yes*		
Simultaneous Heat/Cool	144(d)	*No*		
Economizer	144(e)	*No Economizer*		
Heat Air Supply Reset	144(f)	*Constant Temp*		
Cool Air Supply Reset	144(f)	*Constant Temp*		
Electric Resistance Heating[1]	144(g)			
Air Cooled Chiller Limitation	144(i)			
Duct Leakage Sealing. If Yes, a MECH-4-A must be submitted	144(k)	*Yes*		

1. Total installed capacity (MBtu/hr) of all electric heat on this project exclusive of electric auxiliary heat for heat pumps. If electric heat is used explain which exception(s) to §144(g) apply.

WATER SIDE SYSTEM REQUIREMENTS (Part 2 of 2) MECH-2C

Project Name: *Prince Truck Stop* | Date: *6/7/2011*

		WATER[2] SIDE SYSTEMS: Chillers, Towers, Boilers, Hydronic Loops		
Item or System Tags (i.e. AC-1, RTU-1, HP-1)[1]				
Number of Systems				
		Indicate Page Reference on Plans or Specification[2]		
MANDATORY MEASURES	**T-24 Sections**			
Equipment Efficiency	112(a)			
Pipe Insulation	123			
PRESCRIPTIVE MEASURES				
Cooling Tower Fan Controls	144(a & b)			
Cooling Tower Flow Controls	144(h)			
Variable Flow System Design	144(h)			
Chiller and Boiler Isolation	144(j)			
CHW and HHW Reset Controls	144(j)			
WLHP Isolation Valves	144(j)			
VSD on CHW, CW & WLHP Pumps>5HP	144(j)			
DP Sensor Location	144(j)			

1. The proposed equipment need to match the building plans schedule or specifications. If a requirement is not applicable, put "N/A" in the column next to applicable section.
2. For each chiller, cooling tower, boiler, and hydronic loop (or groups of similar equipment) fill in the reference to sheet number and/or specification section and paragraph number where the required features are documented. If a requirement is not applicable, put "N/A" in the column next to applicable section.

		Service Hot Water, Pool Heating		
Item or System Tags (i.e. WH-1, WHP, DHW, etc…)[1]		*DHW Heater*		
Number of Systems		*1*		
		Indicate Page Reference on Plans or Schedule[2]		
MANDATORY MEASURES	**T-24 Sections**			
SERVICE HOT WATER				
Certified Water Heater	111, 113(a)	*Std Gas 50 gal 0.59 EF*		
Water Heater Efficiency	113(b)	*0.59 EF*		
Service Water Heating Installation	113(c)	*Controls Req.*		
Pipe Insulation	123	*n/a*		
POOL AND SPA				
Pool and Spa Efficiency and Control	114(a)	*n/a*		
Pool and Spa Installation	114(b)	*n/a*		
Pool Heater – No Pilot Light	115(c)	*n/a*		
Spa Heater – No Pilot Light	115(d)	*n/a*		
Pipe Insulation	123	*Required*		

1. The Proposed equipment needs to match the building plans schedule or specifications. If a requirement is not applicable, put "N/A" in the column next to applicable section.
2. For each water heater, pool heater and domestic water loop (or groups of similar equipment) fill in the reference to sheet number and/or specification section and paragraph number where the required features are documented. If a requirement is not applicable, put "N/A" in the column.

MECHANICAL VENTILATION AND REHEAT MECH-3C

Project Name: *Prince Truck Stop* | Date: *6/7/2011*

MECHANICAL VENTILATION (§121(b)2) — AREA BASIS (B–D), OCCUPANCY BASIS (E–G); REHEAT LIMITATION (§144(d)) — VAV MINIMUM (J–M)

A Zone/System	B Condition Area (ft²)	C CFM per ft²	D Min CFM By Area B X C	E Number Of People	F CFM per Person	G Min CFM by Occupant E X F	H REQ'D V.A. Max of D or G	I Design Ventilation Air CFM	J 50% of Design Zone Supply CFM	K B X 0.4 CFM / ft²	L Max. of Columns H, J, K, 300 CFM	M Design Minimum Air Setpoint	N Transfer Air
Minimart	*3,717*	*0.25*	*929*	*62.0*	*15.0*	*929*	*929*	*929*					
Minimart HVAC Systems						*Total*	*929*	*929*					
Totals									Column I Total Design Ventilation Air				

- C Minimum ventilation rate per Section §121, Table 121-A.
- E Based on fixed seat or the greater of the expected number of occupants and 50% of the CBC occupant load for egress purposes for spaces without fixed seating.
- H Required Ventilation Air (REQ'D V.A.) is the larger of the ventilation rates calculated on an AREA BASIS or OCCUPANCY BASIS (Column D or G).
- I Must be greater than or equal to H, or use Transfer Air (column N) to make up the difference.
- J Design fan supply CFM (Fan CFM) x 50%; or the design zone outdoor airflow rate per §121.
- K Condition area (ft²) x 0.4 CFM / ft²; or
- L Maximum of Columns H, J, K, or 300 CFM
- M This must be less than or equal to Column L and greater than or equal to the sum of Columns H plus N.
- N Transfer Air must be provided where the Required Ventilation Air (Column H) is greater than the Design Minimum Air (Column M). Where required, transfer air must be greater than or equal to the difference between the Required Ventilation Air (Column H) and the Design Minimum Air (Column M), Column H minus M.

MECHANICAL EQUIPMENT DETAILS (Part 1 of 2) MECH-5C

Project Name: *Prince Truck Stop* | Date: *6/7/2011*

CHILLER AND TOWER SUMMARY

Equipment Name	Type	Qty.	Efficiency	Tons	PUMPS Qty.	GPM	BHP	Pump Control

DHW / BOILER SUMMARY

System Name	Type	Distribution	Qty.	Rated Input	Vol. (Gals).	Energy Factor or RE	Standby Loss or Pilot	Tank Ext. R-Value	Status
Std Gas 50 gal 0.59 EF	*Small Gas*	*No Pipe Insulation*	*1*	*40,000*	*50*	*0.59*	*n/a*	*n/a*	*New*

MULTI-FAMILY CENTRAL WATER HEATING DETAILS

Control	Hot Water Pump Qty.	HP	Type	Hot Water Piping Length (ft) In Plenum	Outside	Buried	Add ½" Insulation
							☐
							☐
							☐

CENTRAL SYSTEM RATINGS

System Name	Type	Qty.	HEATING Output	Aux. kW	Efficiency	COOLING Output	Efficiency	Status
Carrier 48HJD006	*Packaged DX*	*2*	*59,200*	*0.0*	*80% AFUE*	*61,000*	*13.0 SEER / 11.0 EER*	*New*

CENTRAL SYSTEM FAN SUMMARY

System Name	Fan Type	Economizer Type	SUPPLY FAN CFM	BHP	RETURN FAN CFM	BHP
Carrier 48HJD006	*Constant Volume*	*No Economizer*	*2,000*	*0.25*	*none*	

MECHANICAL EQUIPMENT DETAILS (Part 2 of 2) MECH-5C

Project Name: *Prince Truck Stop* | Date: *6/7/2011*

ZONE SYSTEM SUMMARY

Zone Name	System Name	SYSTEM Type	Qty.	Heating	Cooling	VAV Min CFM Ratio	Reheat Coil	Fan CFM	BHP	Fan Cycles	ECM Motor	Outside Air
										☐	☐	

EXHAUST FAN SUMMARY

EXHAUST FAN Room Name	Qty.	CFM	BHP	EXHAUST FAN Room Name	Qty.	CFM	BHP	EXHAUST FAN Room Name	Qty.	CFM	BHP
Minimart	*2.0*	*100*	*0.10*								
Future Tenant Lease	*0.0*	*100*	*0.10*								

ENVELOPE MANDATORY MEASURES: NONRESIDENTIAL ENV-MM

Project Name: *Prince Truck Stop* | Date: *6/7/2011*

DESCRIPTION

Building Envelope Measures:

§118(a):	Installed insulating material shall have been certified by the manufacturer to comply with the California Quality Standards for insulating material, Title 20 Chapter 4, Article 3.
§118(c):	All Insulating Materials shall be installed in compliance with the flame spread rating and smoke density requirements of Sections 2602 and 707 of Title 24, Part 2.
§118(f):	The opaque portions of framed demising walls in nonresidential buildings shall have insulation with an installed R-value of no less than R-13 between framing members.
§117(a):	All Exterior Joints and openings in the building that are observable sources of air leakage shall be caulked, gasketed, weatherstripped or otherwise sealed.
§116(a) 1:	Manufactured fenestration products and exterior doors shall have air infiltration rates not exceeding 0.3 cfm/ft.² of window area, 0.3 cfm/ft.² of door area for residential doors, 0.3 cfm/ft.² of door area for nonresidential single doors (swinging and sliding), and 1.0 cfm/ft.² for nonresidential double doors (swinging).
§116(a) 2:	Fenestration U-factor shall be rated in accordance with NFRC 100, or the applicable default U-factor.
§116(a) 3:	Fenestration SHGC shall be rated in accordance with NFRC 200, or NFRC 100 for site-built fenestration, or the applicable default SHGC.
§116(b):	Site Constructed Doors, Windows and Skylights shall be caulked between the unit and the building, and shall be weatherstripped (except for unframed glass doors and fire doors).

HOME DESIGN SERVICE
MICHAEL L. MIDEIROS
1569 HILLSBORO AVENUE
MADERA, CALIFORNIA 93637-8641
(559) 675-8097

PREPARED BY	MIDEIROS
DATE	06/07/2011
JOB NAME	PRINCE TRUCK STOP
LOCATION	BAKERSFIELD
CLIMATE ZONE	CZ 13
SHEET	T24-3

LIGHTING MANDATORY MEASURES: NONRESIDENTIAL — LTG-MM

Project Name	Date
Prince Truck Stop	*6/7/2011*

Indoor Lighting Measures:

§131(d): **Shut-off Controls**

1.	For every floor, all interior lighting systems shall be equipped with a separate automatic control to shut off the lighting. This automatic control shall meet the requirements of Section 119 and may be an occupancy sensor, automatic time switch, or other device capable of automatically shutting off the lighting.
2.	Override for Building Lighting Shut-off: The automatic building shut-off system is provided with a manual, accessible override switch in sight of the lights. The area of override is not to exceed 5,000 square feet.
§119(h):	Automatic Control Devices Certified: All automatic control devices specified are certified, all alternate equipment shall be certified and installed as directed by the manufacturer.
§111:	Fluorescent Ballast and Luminaires Certified: All fluorescent fixtures specified for the project are certified and listed in the Directory. All installed fixtures shall be certified.
§131(a):	Individual Room/Area Controls: Each room and area in this building is equipped with a separate switch or occupancy sensor device for each area with floor-to-ceiling walls.
§131(b):	Uniform Reduction for Individual Rooms: All rooms and areas greater than 100 square feet and more than 0.8 watts per square foot of lighting load shall be controlled with bi-level switching for uniform reduction of lighting within the room.
§131(c):	Daylight Area Control: All rooms with windows and skylights that are greater than 250 square feet and that allow for the effective use of daylight in the area shall have 50% of the lamps in each daylit area controlled by a separate switch; or the effective use of daylight cannot be accomplished because the windows are continuously shaded by a building on the adjacent lot. Diagram of shading during different times of the year is included on plans.
§131(c):	Display Lighting. Display lighting shall be separately switched on circuits that are 20 amps or less.6.

Outdoor Lighting Measures:

§130(c)1:	Mandatory lighting power determination for medium base sockets without permanently installed ballasts
§132(a):	All permanently installed luminaires with lamps rated over 100 Watts either have a lamp efficacy of at least 60 lumens per Watt or are controlled by a motion sensor.
§132(b):	All Luminaires with lamps rated greater than 175 Watts in hardscape area, including parking lots, building entrances, canopies, and all outdoor sales areas meet the Cutoff Requirements.
§132(c)1:	All permanently installed outdoor lighting meets the control requirements listed.
§132(c):	Building facades, parking lots, garages, canopies, and outdoor sales areas meet the Multi-Level Lighting Requirements listed.

MECHANICAL MANDATORY MEASURES: NONRESIDENTIAL — MECH-MM

Project Name	Date
Prince Truck Stop	*6/7/2011*

Equipment and System Efficiencies

§111:	Any appliance for which there is a California standard established in the Appliance Efficiency Regulations will comply with the applicable standard.
§115(a):	Fan type central furnaces shall not have a pilot light.
§123:	Piping, except that conveying fluids at temperatures between 60 and 105 degrees Fahrenheit, or within HVAC equipment, shall be insulated in accordance with Standards Section 123.
§124:	Air handling duct systems shall be installed and insulated in compliance with Sections 601, 602, 603, 604, and 605 of the CMC Standards.

Controls

§122(e):	Each space conditioning system shall be installed with one of the following:
1A.	Each space conditioning system serving building types such as offices and manufacturing facilities (and all others not explicitly exempt from the requirements of Section 112 (d)) shall be installed with an automatic time switch with an accessible manual override that allows operation of the system during off-hours for up to 4 hours. The time switch shall be capable of programming different schedules for weekdays and weekends and have program backup capabilities that prevent the loss of the device's program and time setting for at least 10 hours if power is interrupted; or
1B.	An occupancy sensor to control the operating period of the system; or
1C.	A 4-hour timer that can be manually operated to control the operating period of the system.
2.	Each space conditioning system shall be installed with controls that temporarily restart and temporarily operate the system as required to maintain a setback heating and/or a setup cooling thermostat setpoint.
§122(g):	Each space conditioning system serving multiple zones with a combined conditioned floor area more than 25,000 square feet shall be provided with isolation zones. Each zone: shall not exceed 25,000 square feet; shall be provided with isolation devices, such as valves or dampers that allow the supply of heating or cooling to be setback or shut off independently of other isolation areas; and shall be controlled by a time control device as described above.
§122(c):	Thermostats shall have numeric setpoints in degrees Fahrenheit (F) and adjustable setpoint stops accessible only to authorized personnel.
§122(b):	Heat pumps shall be installed with controls to prevent electric resistance supplementary heater operation when the heating load can be met by the heat pump alone
§122(a&b):	Each space conditioning system shall be controlled by an individual thermostat that responds to temperature within the zone. Where used to control heating, the control shall be adjustable down to 55 degrees F or lower. For cooling, the control shall be adjustable up to 85 degrees F or higher. Where used for both heating and cooling, the control shall be capable of providing a deadband of at least 5 degrees F within which the supply of heating and cooling is shut off or reduced to a minimum.

Ventilation

§121(e):	Controls shall be provided to allow outside air dampers or devices to be operated at the ventilation rates as specified on these plans.
§122(f):	All gravity ventilating systems shall be provided with automatic or readily accessible manually operated dampers in all openings to the outside, except for combustion air openings.
§121(f):	Ventilation System Acceptance. Before an occupancy permit is granted for a newly constructed building or space, or a new ventilating system serving a building or space is operated for normal use, all ventilation systems serving the building or space shall be certified as meeting the Acceptance Requirements for Code Compliance

Service Water Heating Systems

§113(c)	Installation
3.	Temperature controls for public lavatories. The controls shall limit the outlet Temperature to 110°F.
2.	Circulating service water-heating systems shall have a control capable of automatically turning off the circulating pump when hot water is not required.

HVAC SYSTEM HEATING AND COOLING LOADS SUMMARY

Project Name	Date
Prince Truck Stop	6/7/2011
System Name	**Floor Area**
Minimart HVAC Systems	3,717

ENGINEERING CHECKS		SYSTEM LOAD	COIL COOLING PEAK			COIL HTG. PEAK	
Number of Systems	2		**CFM**	**Sensible**	**Latent**	**CFM**	**Sensible**
Heating System		**Total Room Loads**	3,972	75,636	19,879	2,949	54,654
Output per System	59,200	**Return Vented Lighting**		0			
Total Output (Btuh)	118,400	**Return Air Ducts**		2,269			1,640
Output (Btuh/sqft)	31.9	**Return Fan**		0			0
Cooling System		**Ventilation**	929	23,142	-4,494	929	43,012
Output per System	61,000	**Supply Fan**		2,030			-2,030
Total Output (Btuh)	122,000	**Supply Air Ducts**		2,269			1,640
Total Output (Btuh/sqft)	32.8						
Total Output (sqft/Ton)	365.6	**TOTAL SYSTEM LOAD**		105,345	15,384		98,916
Air System							
CFM per System	2,000	**HVAC EQUIPMENT SELECTION**					
Airflow (cfm)	4,000	Carrier 48HJD006		105,882	13,537		118,400
Airflow (cfm/sqft)	1.08						
Airflow (cfm/Ton)	393.4						
Outside Air (%)	23.2 %	**Total Adjusted System Output** (Adjusted for Peak Design conditions)		105,882	13,537		118,400
Outside Air (cfm/sqft)	0.25						
Note: values above given at ARI conditions		**TIME OF SYSTEM PEAK**			Aug 3 PM		Jan 1 AM

HEATING SYSTEM PSYCHROMETRICS (Airstream Temperatures at Time of Heating Peak)

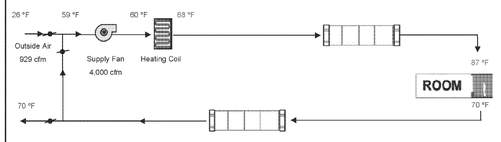

COOLING SYSTEM PSYCHROMETRICS (Airstream Temperatures at Time of Cooling Peak)

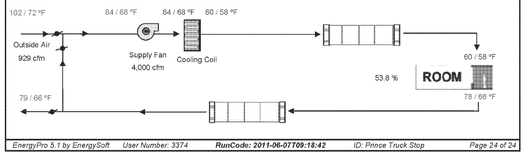

HOME DESIGN SERVICE
MICHAEL L. MIDEIROS
1569 HILLSBORO AVENUE
MADERA, CALIFORNIA 93637-8641
(559) 675-8097

PREPARED BY: MIDEIROS
DATE: 06/07/2011
JOB NAME: PRINCE TRUCK STOP
LOCATION: BAKERSFIELD | CLIMATE ZONE: CZ 13
SHEET: T24-4

FOUNDATION PLAN

SCALE: 1/4" = 1'-0"

N

SYMBOL	SIZE	REINFORCEMENT
F1	12" WIDE X 20" DP. (12" BELOW GRADE DEEP CONTINUOUS) (EXTERIOR FOOTING) SEE C/A8.2	1-#5 TOP & BOTTOM
F2	24" SQ. x 18" DP BELOW GRADE (BELOW SLAB)	#4 @ 12" OC EA WAY
F3	3'-6" SQ. x 18" DP (INTERIOR FOOTING) BELOW GRADE	#4 @ 12" OC EA WAY
F4	3'-0" SQ. x 18" DP (INTERIOR FOOTING) BELOW GRADE	#4 @ 12" OC EA WAY

FOOTING SCHEDULE

-MAXIMUM ALLOWABLE SOIL BEARING PRESSURE IS ASSUMED TO BE 1.5 KSF.
-CONCRETE SHALL BE 3000 PSI @ 28 DAYS. (CALC'D @ 2500 PSI). NO SPECIAL INSPECTION IS REQ'D
-PROVIDED FOOTING HEIGHT ASSUMES BOT. 12" MIN. BELOW UNDISTURBED GRADE; HOWEVER IF ENGINEERED AND SUPERVISED FILL IS OPTED THEN FTG. DEPTH WILL BE 24" OR PROPOSED ADJOINING GRADE MIN. 14" ABOVE BOT. OF FTG., WHICHEVER IS GREATER.
-PROVIDE 3" COVER

Sheet No. A1.0

Title: FOUNDATION PLAN

Drawn: DWD
Checked: MAH
Approved: MIKE A. HAMZY
Project No: 09-208
Date: 06/16/2011

REVISIONS		
No.	Date	Description
–	–	–
–	–	–
–	–	–
–	–	–
–	–	–
–	–	–
–	–	–

PRINCE TRUCK STOP

NWC OF STATE ROUTE 99 &
STATE ROUTE 166 (MARICOPA HWY)
BAKERSFIELD, CA 93313

HARBISON INTERNATIONAL INC.
ENGINEERS – SURVEYORS – PLANNERS
2755 E. SHAW AVE., SUITE 101, FRESNO, CA 93710
PHONE: (559) 294-7485 FAX: (559) 294-7481

REGISTERED PROFESSIONAL ENGINEER
DALE H WINN
No. 23273
Exp. 12-31-11
CIVIL
STATE OF CALIFORNIA

This and all other project documents and all ideas, aesthetics and designs incorporated therein are instruments of service. All project documents are the registered property of Harbison International (HI) and cannot be lawfully used in whole or in part for any project or purpose except as described in the contractual agreement between HI and the Client. HI hereby gives formal notice that any such project document use, reproduction, or modification (misuse) is not only unlawful but also automatically binds all parties involved with misuse to fully indemnify and defend HI and HI's consultants to the maximum legal extent against all losses, demands, claims or liabilities arising directly or indirectly from project document misuse.

Project documents describe design intent of work and are not a representation of the as-built or existing conditions. HI and HI's consultants make no representations concerning the accuracy of documents and are not responsible for any discrepancies between project documents and the existing conditions.

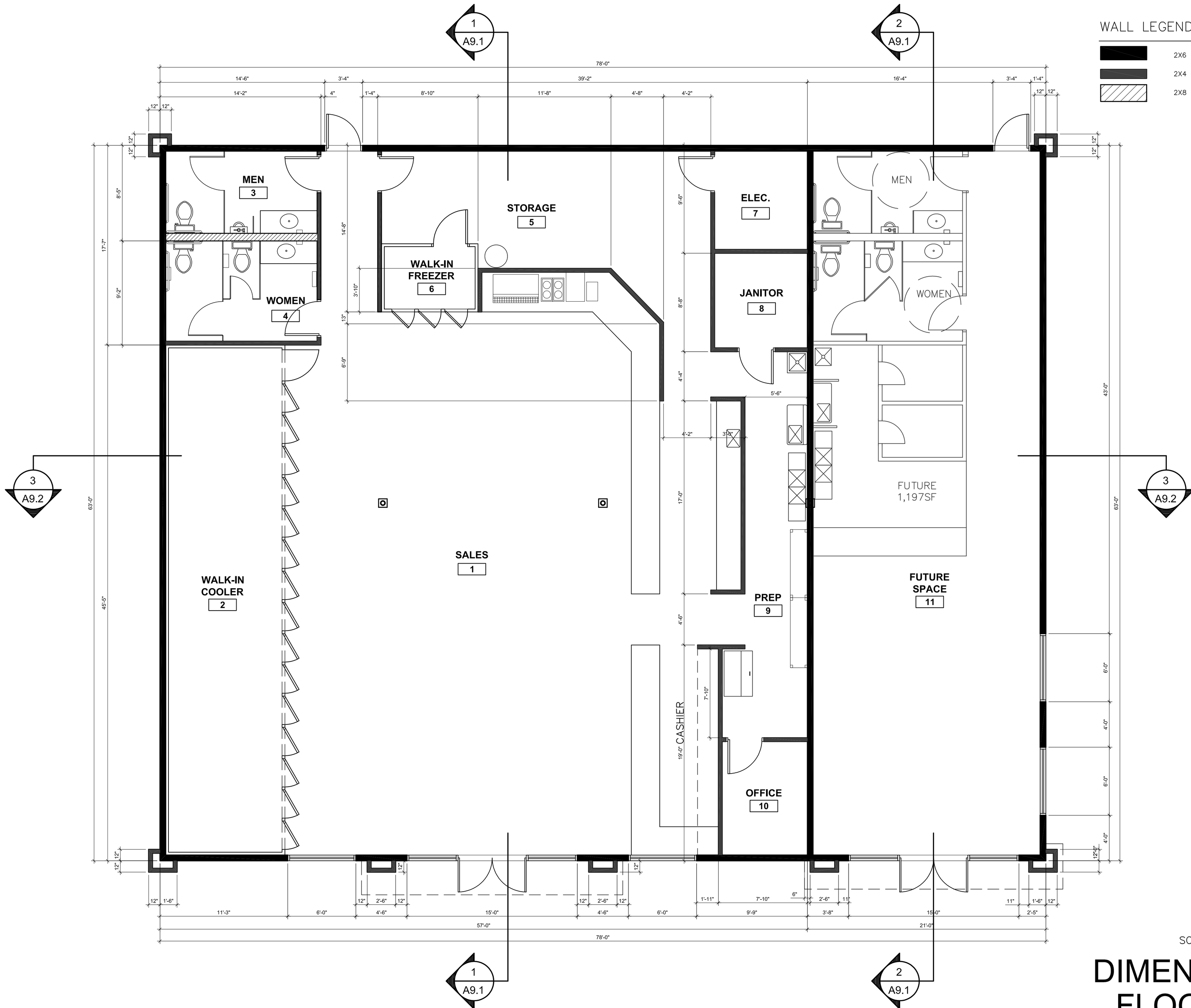

SCALE: 1/4" = 1'–0"

DIMENSIONED FLOOR PLAN

This and all other project documents and all ideas, aesthetics and designs incorporated herein are property of HARBISON INTERNATIONAL INC. and shall not be used in whole or in part for any project or purpose except as described in the contractual agreement between HI and the Client. HI shall retain all common law, statutory and other reserved rights, including the copyright thereto. Drawings may not be changed or copied in any form or manner whatsoever nor are they to be assigned to any third party without first obtaining the express written permission and consent of HI. Any unauthorized use of these drawings is prohibited by law and any person or entity violating HI's rights shall be liable for damages, including but not limited to actual damages, statutory damages, costs and attorney's fees. Client shall indemnify and defend HI and HI's consultants from any claim arising out of the unauthorized use of these drawings by Client or any person or entity that acquires or obtains the drawings from or through Client without the express written permission of HI. Client shall fully indemnify and defend HI and HI's consultants to the maximum legal extent against all losses, demands, claims or liabilities arising directly or indirectly from project document misuse.
Project documents describe design intent of work, and are not a representation of the manner, means or methods of construction. HI is not responsible for any discrepancies concerning the accuracy of documents and are not responsible for any discrepancies between project documents and the existing conditions.

REGISTERED PROFESSIONAL ENGINEER
STATE H WINN
No. 23273
Exp. 12-31-11
CIVIL
STATE OF CALIFORNIA

HARBISON INTERNATIONAL INC.
ENGINEERS – SURVEYORS – PLANNERS
2755 E. SHAW AVE., SUITE 101, FRESNO, CA 93710
PHONE: (559) 294-7485 FAX: (559) 294-7481

PRINCE TRUCK STOP

NWC OF STATE ROUTE 99 &
STATE ROUTE 166 (MARICOPA HWY)
BAKERSFIELD, CA 93313

REVISIONS		
No.	Date	Description

Drawn: DWD
Checked: MAH
Approved: MIKE A. HAMZY

Project No: 09-208
Date: 06/16/2011

Title
DIMENSIONED FLOOR PLAN

Sheet No.
A1.1

WALL LEGEND

- 2X6 WOOD-FRAMED WALL
- 2X4 WOOD-FRAMED WALL
- 2X8 WOOD-FRAMED PLUMBING WALL

MEN 3
WOMEN 4
STORAGE 5
WALK-IN FREEZER 6
ELEC. 7
JANITOR 8
PREP 9
OFFICE 10
FUTURE SPACE 11
SALES 1
WALK-IN COOLER 2
CASHIER
COUNTER HEIGHT 34" MAX.
MEN
WOMEN
FUTURE 1,197SF

SCALE: 1/4" = 1'-0"

NOTED FLOOR PLAN

This and all other project documents and all ideas, aesthetics and designs incorporated therein are instruments of service and shall remain the property of HARBISON INTERNATIONAL (HI) and cannot be lawfully used in whole or in part for any project or purpose except as described in the contractual agreement between HI and the Client. HI retains all rights under statutory and common law, including but not limited to, copyright. Unauthorized re-use of these documents by any party is prohibited and HI and its consultants (Consultants) are not responsible for any damages which may result from such re-use. Re-use by any party shall be at such party's sole risk and without liability to HI and its Consultants, and such party shall fully indemnify and defend HI and HI's consultants, to the maximum legal extent against all losses, damages, claims or liabilities arising directly or indirectly from project document misuse.
Project documents describe design intent of work and are not a representation of the manner, means or methods of construction. HI and its consultants are not responsible for issues concerning the accuracy of documents and are not responsible for any discrepancies between project documents and the existing conditions.

REGISTERED PROFESSIONAL ENGINEER
STATE OF CALIFORNIA
MICHAEL H WINN
No. 33273
Exp. 12-31-11
CIVIL

HARBISON INTERNATIONAL INC.
ENGINEERS - SURVEYORS - PLANNERS
2755 E. SHAW AVE., SUITE 101, FRESNO, CA 93710
PHONE: (559) 294-7485 FAX: (559) 294-7481

PRINCE TRUCK STOP

NWC OF STATE ROUTE 99 &
STATE ROUTE 166 (MARICOPA HWY)
BAKERSFIELD, CA 93313

REVISIONS

No.	Date	Description

Drawn: DWD
Checked: MAH
Approved: MIKE A. HAMZY

Project No: 09-208
Date: 06/16/2011

Title
NOTED FLOOR PLAN

Sheet No.
A1.2

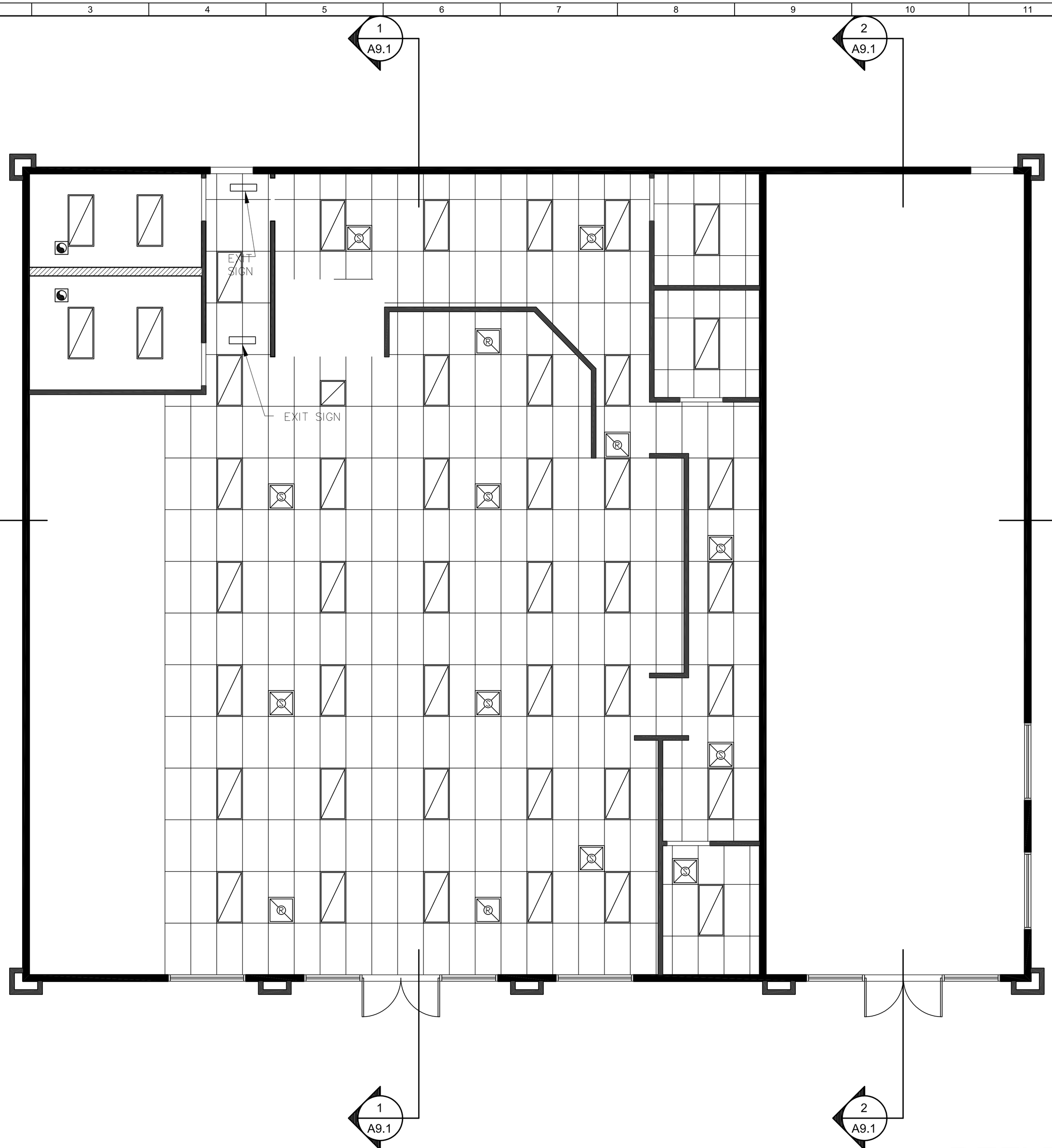

General Notes

1. GENERAL CONTRACTOR IS RESPONSIBLE FOR COORDINATION OF ALL BLOCKING AND BACKING LOCATIONS AS REQUIRED BY EQUIPMENT, FURNISHINGS, & FIXTURE SUPPLIERS.
2. GENERAL CONTRACTOR SHALL REFER TO FINISH SCHEDULE FOR ALL INTERIOR FINISHES AND REQUIREMENTS.
3. GENERAL CONTRACTOR SHALL INTERFACE WITH PLUMBING, MECHANICAL, AND ELECTRICAL PLANS TO CONFIRM ANY SPECIFIC REQUIREMENTS OF ALL FIXTURES/FURNISHINGS SHOWN ON PLAN(S).
4. GENERAL CONTRACTOR SHALL NOTIFY THE ARCHITECT IMMEDIATELY IF ANY AMBIGUOUS OR UNCLEAR CONDITIONS ARE ENCOUNTERED.
5. LIGHTING LOCATIONS SHALL TAKE PRECEDENCE OVER MECHANICAL DISTRIBUTION GRILLES – GENERAL CONTRACTOR SHALL COORDINATE INSTALLATION OF THESE COMPONENTS WITH ELECTRICAL AND MECHANICAL SUB–CONTRACTORS.
6. INTERIOR DOORS TO OFFICES SHALL BE WOOD FRAMED W/GLASS PANELS, UNDERCUT FOR VENTS OR HOLLOW METAL W/ MTL. FRAME

VERTICAL STRUT MAXIMUM LENGTHS:

1/2" EMT	TO 5'–0"
3/4" EMT	3/4" EMT
1" EMT	TO 10'–0"
2–1/2" X 25 GA. METAL STUD	TO 10'–0"
DOUBLE 3–5/8" X 25 GA. METAL STUD*	TO 15'–0"

*STITCHED WITH #6 TEC/SM SCREW @ 16" O.C.

ENGINEERING DESIGN IS REQUIRED WHEN STRUTS ARE MORE THAN 15 FEET IN LENGTH.

FIXTURE SCHEDULE

- 2x4 FLUORESCENT LIGHT FIXTURE (2 LAMP 72W)
- 2x4 FLUORESCENT LIGHT FIXTURE (4 LAMP 144W)
- 8' FLUORESCENT LIGHT FIXTURE (2 LAMP 72W)
- SUPPLY AIR GRILLE
- RETURN AIR GRILLE
- EMERGENCY EXIT LIGHT WITH BATTERY BACK–UP
- CEILING RECEPTACLE
- WALL PACK 100 HPS
- EXTERIOR LIGHT FIXTURE – VERIFY STYLE / COLOR WITH OWNER
- EXIT — ILLUMINATED EXIT SIGN WITH BATTERY BACK–UP
- G.F.I. — GROUND FAULT INTERRUPT

CEILING TYPE

TYPE A	24"x48" LAY–IN CEILING PANELS
TYPE B	1/2" GYP BD–TABE / TEXTURE / PAINT TO MATCH WALLS
TYPE C	24"x48" LAY–IN "VINYL ROCK" CEILING PANELS

N

SCALE: 1/4" = 1'–0"

REFLECTED CEILING PLAN

This and all other project documents and all ideas, aesthetics and designs incorporated therein, are instruments of service and shall remain the property of the Architect whether the project for which they are prepared is executed or not. They are not to be used in whole or in part for any project or purpose except as described in the contractual agreement between HI and the Client. HI shall retain all rights, including but not limited to, statutory and common law rights, including (without limitation) all copyrights, in and to all such documents. Any use of such documents which is not specifically authorized by HI and which gives rise to any claim or cause of action against HI shall be at the sole risk of the party making such use. Such party shall indemnify and hold HI harmless from and against any and all claims, losses, damages, liabilities and expenses (including reasonable attorneys' fees) which HI may incur as a result of such use. Project documents describe design intent of work, and are not a representation of the means and methods of construction. Architect is not responsible for any inconsistencies concerning the accuracy of documents and are not responsible for any discrepancies between project documents and the existing conditions.

REGISTERED PROFESSIONAL ENGINEER
STATE OF CALIFORNIA
MAH
No. 23273
Exp. 12–31–11
CIVIL

HARBISON INTERNATIONAL INC.
ENGINEERS – SURVEYORS – PLANNERS
2755 E. SHAW AVE., SUITE 101, FRESNO, CA 93710
PHONE: (559) 294–7485 FAX: (559) 294–7481

PRINCE TRUCK STOP
NWC OF STATE ROUTE 99 &
STATE ROUTE 166 (MARICOPA HWY)
BAKERSFIELD, CA 93313

REVISIONS

No.	Description	Date

Drawn: DWD
Checked: MAH
Approved: MIKE A. HAMZY

Project No: 09-208
Date: 06/16/2011

Title
REFLECTED CEILING

Sheet No.
A1.4

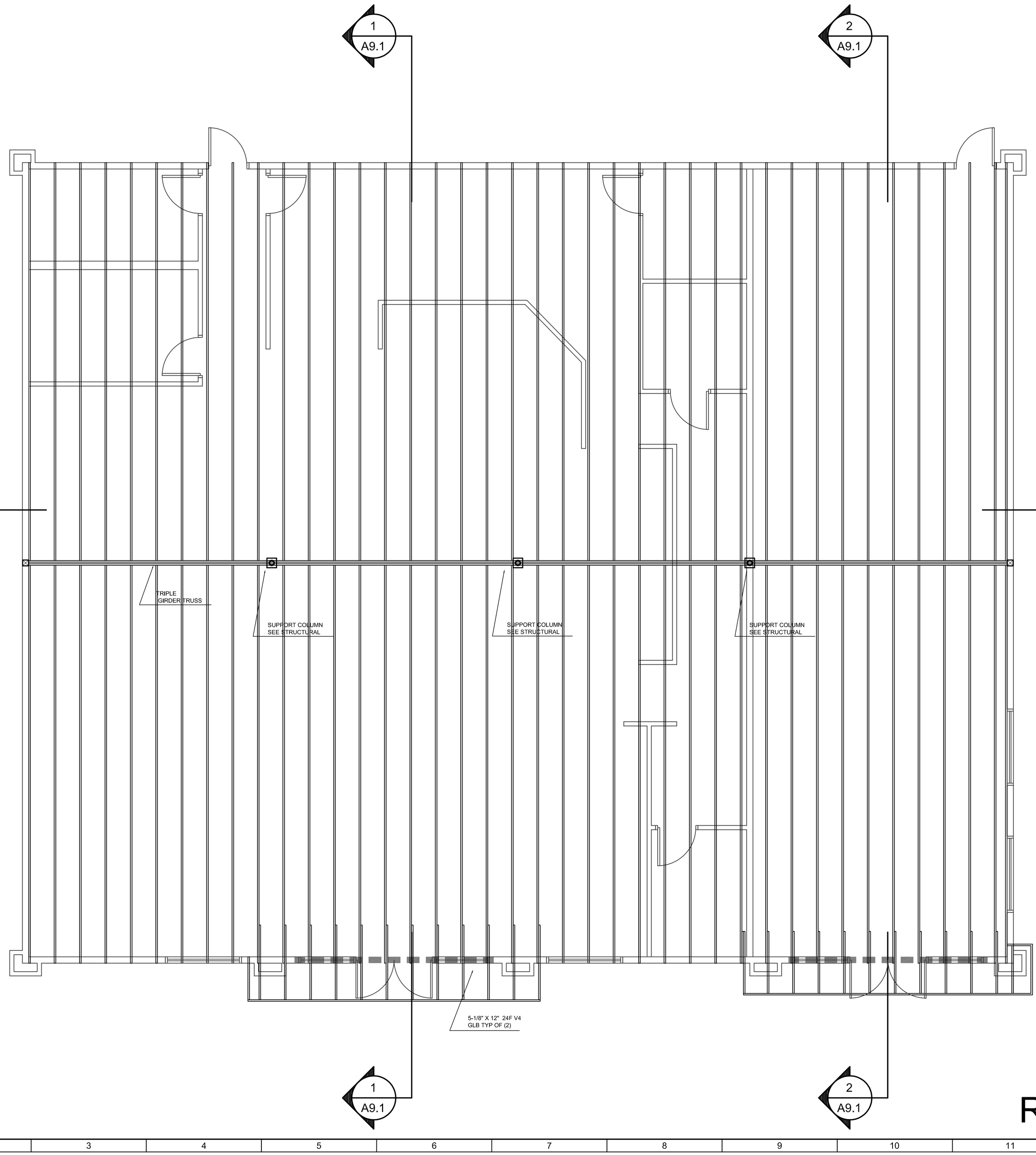

ROOF FRAMING NOTES:

NOTE: SEE SPECIFICATIONS FOR ADDITIONAL REQUIREMENTS.

1. MATERIALS: WOOD TRUSSES SHALL BE FACTORY CONSTRUCTED WITH STRUCTURAL WOOD CHORDS AND WEBS AND HAVE STEEL CONNECTION PLATES APPROVED BY U.B.C.
2. DESIGN SHALL BE BASED ON U.B.C. REQUIREMENTS, WITH A MAXIMUM 0% STRESS INCREASE FOR THE DURATION OF LOAD ON ROOF TRUSSES.
3. ALL ROOF TRUSSES SHALL BE SPACED AT 24" O.C. EXCEPT AS NOTED ON ROOF FRAMING PLAN. CONTRACTOR TO PROVIDE BLOCKING @ PLYWOOD PANEL EDGES AT ANY WIDER SPACINGS THAT MAY BE INDICATED. TRUSS MANUFACTURER SHALL ANTICIPATE THIS CONDITION FOR TRUSS LOADING.
4. PROVIDE MINIMUM 1/2" CAMBER TO PROVIDE CLEARANCE TO TOP PLATES AT INTERIOR NON-BEARING WALLS. (SEE TRUSS DETAILS TR-1 SHEET FOR TRUSS CLIPS AND OTHER DETAILS.
5. TRUSS MANUFACTURER SHALL SUBMIT CALCULATIONS AND SHOP DRAWINGS TO PROJECT ARCHITECT/ENGINEER FOR REVIEW PRIOR TO FABRICATION. DESIGN OF TRUSSES SHALL BE SUPERVISED AND SIGNED BY A REGISTERED CALIFORNIA PROFESSIONAL ENGINEER AND SUBMITTED TO THE BUILDING DEPARTMENT FOR REVIEW AND APPROVAL PRIOR TO INSTALLATION.
6. TRUSS MANUFACTURER SHALL PROVIDE ALL BRIDGING, CROSS BRACING AND OTHER ITEMS REQUIRED TO COMPLETE TRUSS INSTALLATION.
7. ALL 'GABLE END TRUSSES SHALL BE STRUCTURALLY SHEATHED TO TRANSMIT TO SHEAR WALLS. TRUSS MANUFACTURER MAY INSTALL SHEATHING AT FACTORY AT CONTRACTOR'S OPTION.
8. TRUSS MANUFACTURER SHALL PROVIDE RAKE SUPPORT NOTCHING AT GABLE END TRUSSES AS INDICATED IN PLANS.
9. 'GABLE END' SHEATHED TRUSSES SHALL HAVE VERTICALS SPACED @ 16" O.C. EXCEPT AT LOCATIONS TO ACCOMODATE ATTIC VENT FRAMING.
10. APPROVED TRUSS DRAWINGS AND CALCS. MUST BE ON JOB SITE FOR INSPECTION PURPOSES.
11. PROVIDE DRAFTSTOP AT ATTIC BY EXTENDING THE INTERMEDIATE DEMISING WALL IN A WAY NOT TO EXCEED 3,000 SQ. FT. EACH ATTIC SPACE.
12. PROVIDE COMPLETE TRUSS DRAWINGS AND CALCULATIONS. TRUSS DRAWINGS MUST BE APPROVED WITHIN 30 DAYS OF PERMIT ISSUANCE. NO INSPECTIONS WILL BE PERFORMED IF TRUSS DRAWINGS ARE NOT APPROVED AFTER 30 DAYS.

PROVIDE SIMPSON H2.5A CLIP
TRUSS TO PLATE

USE MSTC 52 STRAPS AT ALL
TOP PLATE SPLICES (INCLUDING
GLU LAM BEAM TO TOP PLATE
SPLICE)

ROOF DIAPHRAGM NAILING:
8d @ 6" OC EDGE NAILING
8d @ 6" OC FIELD NAILING (AT BLOCKING)
8d @ 12" OC FIELD NAILING (NO BLOCKING)

USE EPC 4.62-55 @ 6X6 POSTS WHICH
CARRY OUTSIDE ENDS OF 3-PLY GIRDER\TRUSS

N

SCALE: 1/4" = 1'-0"

ROOF FRAMING PLAN

This and all other project documents and all ideas, aesthetics and designs incorporated therein are instruments of service and shall remain the property of the Architect. No part thereof shall be loaned, rented or disclosed or used in whole or in part for any purpose or purpose except as described in the contractual agreement between HI and the Client. HI retains all rights to these documents and ideas under all applicable statutory and common law. Ownership of these documents and ideas does not transfer to the Client or any other party even if paid for. Unauthorized use of these documents and ideas is prohibited and is void and invalid. Any unauthorized use, sale, transfer or publication of these documents and ideas by any person or entity is at that party's sole risk and without liability to HI and HI's consultants. Client shall indemnify and hold harmless HI and HI's consultants from all claims, damages, losses and expenses including attorney's fees arising out of or resulting from any such unauthorized use. Client shall also indemnify and defend HI and HI's consultants to the maximum legal extent against all losses, demands, claims or liabilities arising directly or indirectly from project document misuse.

Project documents describe design intent of work and are not a representation of the manner or method of construction. Harbison International Inc. is not responsible for any conditions concerning the accuracy of documents and are not responsible for any discrepancies between project documents and the existing conditions.

REGISTERED PROFESSIONAL ENGINEER
MICHAEL H WINN
No. 23273
Exp. 12-31-11
CIVIL
STATE OF CALIFORNIA

HARBISON INTERNATIONAL INC.
ENGINEERS - SURVEYORS - PLANNERS
2755 E. SHAW AVE., SUITE 101, FRESNO, CA 93710
PHONE: (559) 294-7485 FAX: (559) 294-7481

PRINCE TRUCK STOP

NWC OF STATE ROUTE 99 &
STATE ROUTE 166 (MARICOPA HWY)
BAKERSFIELD, CA 93313

REVISIONS		
No.	Date	Description

Drawn: DWD
Checked: MAH
Approved: MIKE A. HAMZY

Project No: 09-208
Date: 06/16/2011

Title: ROOF FRAMING

Sheet No.: A2.1

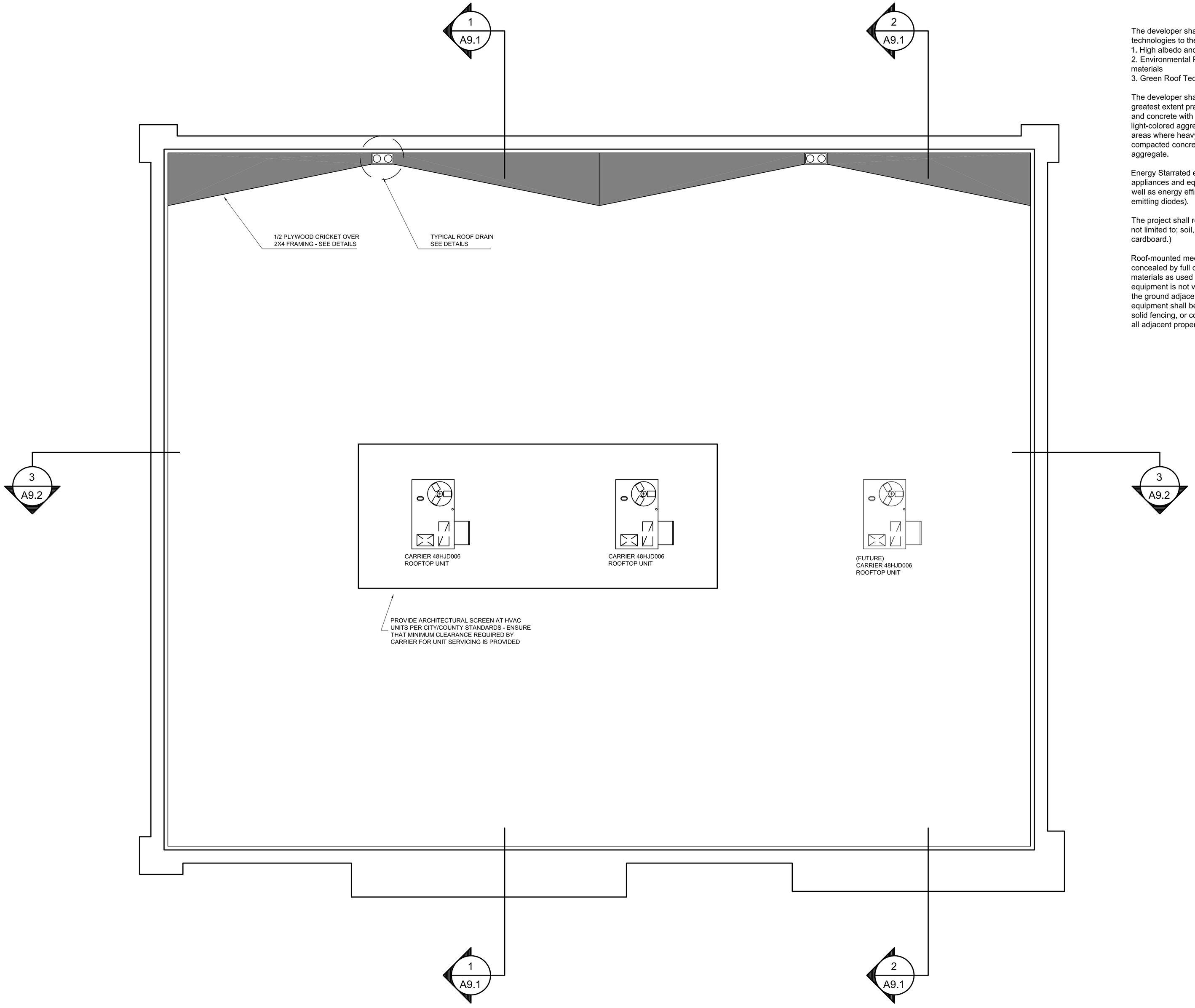

The developer shall install one or more of the following roofing technologies to the extent practicable to reduce energy consumption:
1. High albedo and low-emissive roofs
2. Environmental Protection Agency Energy Star approved roofing materials
3. Green Roof Technology

The developer shall use cool paving materials in parking areas to the greatest extent practicable. Examples of cool paving include asphalt and concrete with high solar reflectivity (i.e. through the use of light-colored aggregate), porous or permeable asphalt or concrete in areas where heavy duty paving materials are not necessary, roller compacted concrete and asphalt chip seals that employ light-colored aggregate.

Energy Starrated energy efficient heating and cooling systems, appliances and equipment, and control systems shall be installed, as well as energy efficient lighting in parking and service areas (i.e. light emitting diodes).

The project shall reuse and recycle construction waste (including, but not limited to; soil, vegetation, concrete, lumber, metal, and cardboard.)

Roof-mounted mechanical, refrigeration or heating equipment shall be concealed by full or partial enclosures that employ the same building materials as used in the facade and/or roof design so that the equipment is not visible from any off-site location. When located on the ground adjacent to a building, mechanical, refrigeration or heating equipment shall be screened by landscaping, solid masonry wall or solid fencing, or combination thereof, from abutting public streets and all adjacent properties developed with residential or commercial uses.

SCALE: 1/4" = 1'-0"

ROOF PLAN

This and all other project documents and all ideas, aesthetics and designs incorporated therein are instruments of service. All project documents are the registered property of Harbison International (HI) and cannot be lawfully used in whole or in part for any project or purpose except as described in the contractual agreement between HI and the Client. HI hereby gives formal notice that any such project document use, reproduction, or modification (misuse) is not only unlawful but also automatically binds all parties involved with misuse to fully indemnify and defend HI and HI's consultants to the maximum legal extent against all losses, demands, claims or liabilities arising directly or indirectly from project document misuse.

Project documents describe design intent of work and are not a representation of the as-built or existing conditions. HI and HI's consultants make no representations concerning the accuracy of documents and are not responsible for any discrepancies between project documents and the existing conditions.

REGISTERED PROFESSIONAL ENGINEER
DALE H WINN
No. 23273
Exp. 12-31-11
CIVIL
STATE OF CALIFORNIA

HARBISON INTERNATIONAL INC.
ENGINEERS – SURVEYORS – PLANNERS
2755 E. SHAW AVE., SUITE 101, FRESNO, CA 93710
PHONE: (559) 294-7485 FAX: (559) 294-7481

PRINCE TRUCK STOP
NWC OF STATE ROUTE 99 &
STATE ROUTE 166 (MARICOPA HWY)
BAKERSFIELD, CA 93313

REVISIONS

No.	Date	Description
-	-	-
-	-	-
-	-	-
-	-	-
-	-	-
-	-	-
-	-	-

Drawn: DWD
Checked: MAH
Approved: MIKE A. HAMZY

Project No: 09-208
Date: 06/16/2011

Title
ROOF PLAN

Sheet No.
A3.1

EXTERIOR ELEVATIONS LEGEND

	MATERIAL	DESCRIPTION/COLOR
1	METAL ROOFING	DECRA ROOFING ORANGE COLOR BARCELONA BARREL
2	FOAM CORNICE	SW6146–UMBER
3	STUCCO EXPANSION JOINT	PAINTED TO MATCH ADJACENT SURFACE
4	ALUMINUM STOREFRONT SYSTEM	+9' HT. BRONZE ANODIZED
5	CARWASH ROLLUP DOOR (IF APPLICABLE)	NOT USED
6	STUCCO WALLS & SOFFIT	SW6143–BASKETBEIGE
7	STUCCO ACCENT COLOR	6146–UMBER
8	STUCCO ACCENT COLOR	SW6124–CARDBOARD
9	WALL MOUNTED LIGHTS	TO BE SELECTED
10	ALUMINUM REVEAL (PAINTED)	SW6143–BASKETBEIGE
11	FOAM TRIM	SW6335–FIREDBRICK
12	BLDG. SIGN LOCATION	PER CITY STANDARDS
13	METAL DOOR AND FRAME	MATCH SW6124–CARDBOARD
14	DECORATIVE COLUMNS	SW6152–SUPERIOR BRONZE
15	BRICK VENEER TO MATCH	STYLE AND COLOR TO MATCH
16	SMOOTH STUCCO ACCENT	SW6124–CARDBOARD
17	ILLUMINATED BUILDING ADDRESS SIGN	PER CITY STANDARDS
18	PARAPET CAPS/ LEADERS/VENTS/MISS PAINTED TO MATCH	PAINT TO MATCH ADJ. SURFACE
19	STUCCO ACCENT COLOR	SW6459 JADITE
20	SLATE VENEER/TILE	NATURAL COLOR
21	METAL AWNING	SW6335–FIREDBRICK
22	FABRIC AWNING	PYROTONE FLAME RETARDANT
23	SHAPED FROM MOLDING @ FABRIC AWNING	SW6335–FIREDBRICK
24	STUCCO ACCENT COLOR	SW6143–BASKETBEIGE

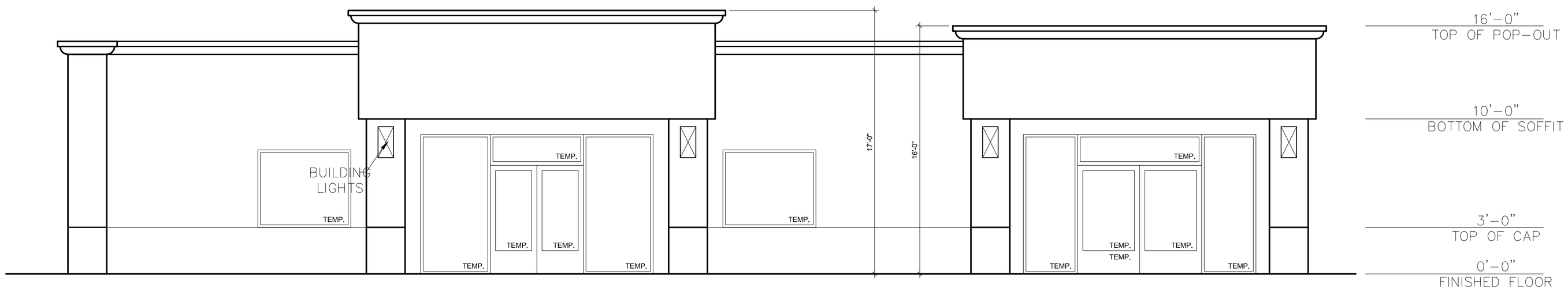

1 A6.1 FRONT ELEVATION
SCALE: 1/4" =1'-0"

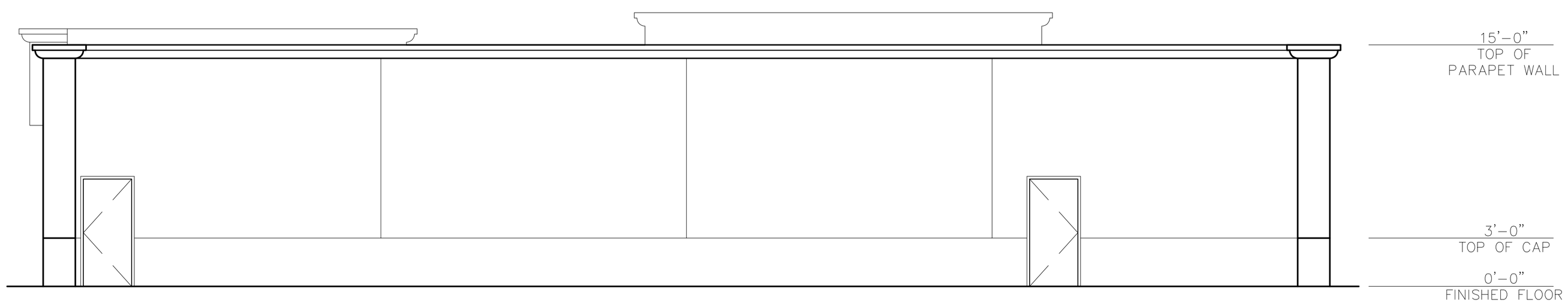

2 A6.1 REAR ELEVATION
SCALE: 1/4" =1'-0"

EXTERIOR ELEVATIONS

This and all other project documents and all ideas, aesthetics and designs incorporated therein are instruments of service. All project documents are the registered property of Harbison International (HI) and cannot be fully used in whole or in part for any project or purpose except as described in the contractual agreement between HI and the Client. HI hereby gives formal notice that any such project documents are reproduction, or modification (inclusive) is not only unlawful but also automatically holds all involved with misuse to fully indemnify and defend HI and HI's consultants to the maximum legal extent against all losses, demands, claims or liabilities arising directly or indirectly from project document misuse.

Project documents describe design intent of work and are not a representation of the as-built or existing conditions. HI and HI's consultants make no representations concerning the accuracy of documents and are not responsible for any discrepancies between project documents and the existing conditions.

REGISTERED PROFESSIONAL ENGINEER
DALE H WINN
No. 23273
Exp. 12-31-11
CIVIL
STATE OF CALIFORNIA

HARBISON INTERNATIONAL INC.
ENGINEERS – SURVEYORS – PLANNERS
2755 E. SHAW AVE., SUITE 101, FRESNO, CA 93710
PHONE: (559) 294–7485 FAX: (559) 294–7481

PRINCE TRUCK STOP
NWC OF STATE ROUTE 99 &
STATE ROUTE 166 (MARICOPA HWY)
BAKERSFIELD, CA 93313

REVISIONS

No.	Date	Description
-	-	-
-	-	-
-	-	-
-	-	-
-	-	-
-	-	-
-	-	-

Drawn: DWD
Checked: MAH
Approved: MIKE A. HAMZY

Project No: 09-208
Date: 06/16/2011

Title
EXTERIOR ELEVATIONS

Sheet No.
A6.1

EXTERIOR ELEVATIONS LEGEND		
	MATERIAL	DESCRIPTION/COLOR
1	METAL ROOFING	DECRA ROOFING ORANGE COLOR BARCELONA BARREL
2	FOAM CORNICE	SW6146–UMBER
3	STUCCO EXPANSION JOINT	PAINTED TO MATCH ADJACENT SURFACE
4	ALUMINUM STOREFRONT SYSTEM	+9' HT. BRONZE ANODIZED
5	CARWASH ROLLUP DOOR (IF APPLICABLE)	NOT USED
6	STUCCO WALLS & SOFFIT	SW6143–BASKETBEIGE
7	STUCCO ACCENT COLOR	6146–UMBER
8	STUCCO ACCENT COLOR	SW6124–CARDBOARD
9	WALL MOUNTED LIGHTS	TO BE SELECTED
10	ALUMINUM REVEAL (PAINTED)	SW6143–BASKETBEIGE
11	FOAM TRIM	SW6335–FIREDBRICK
12	BLDG. SIGN LOCATION	PER CITY STANDARDS
13	METAL DOOR AND FRAME	MATCH SW6124–CARDBOARD
14	DECORATIVE COLUMNS	SW6152–SUPERIOR BRONZE
15	BRICK VENEER TO MATCH	STYLE AND COLOR TO MATCH
16	SMOOTH STUCCO ACCENT	SW6124–CARDBOARD
17	ILLUMINATED BUILDING ADDRESS SIGN	PER CITY STANDARDS
18	PARAPET CAPS/ LEADERS/VENTS/MISS PAINTED TO MATCH	PAINT TO MATCH ADJ. SURFACE
19	STUCCO ACCENT COLOR	SW6459 JADITE
20	SLATE VENEER/TILE	NATURAL COLOR
21	METAL AWNING	SW6335–FIREDBRICK
22	FABRIC AWNING	PYROTONE FLAME RETARDANT
23	SHAPED FROM MOLDING @ FABRIC AWNING	SW6335–FIREDBRICK
24	STUCCO ACCENT COLOR	SW6143–BASKETBEIGE

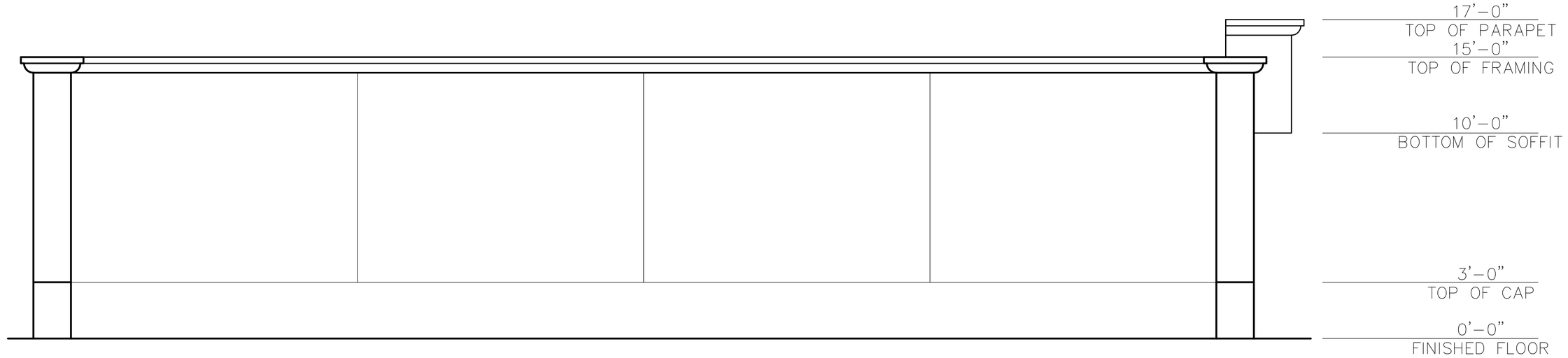

3 / A6.2 LEFT SIDE ELEVATION

SCALE: 1/4" =1'-0"

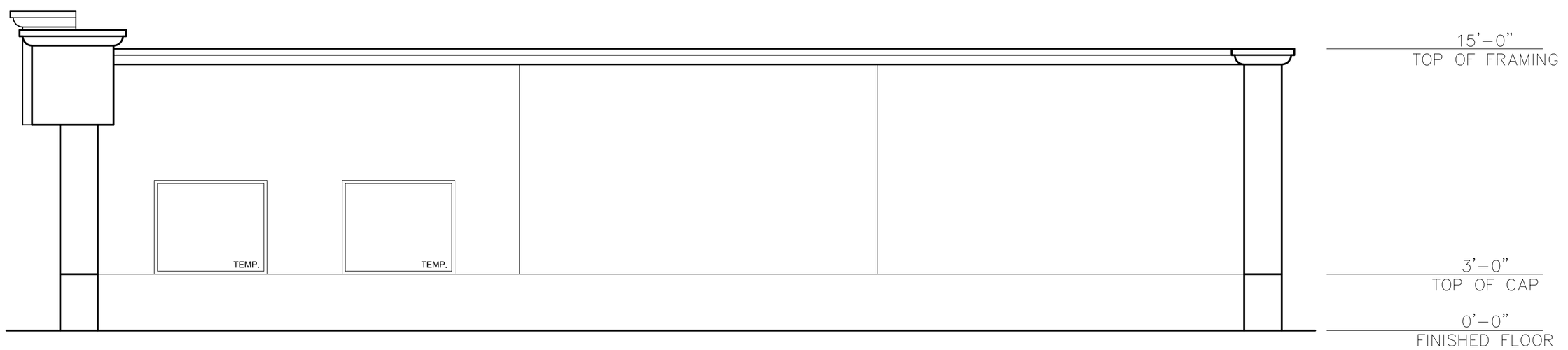

4 / A6.2 RIGHT SIDE ELEVATION

SCALE: 1/4" =1'-0"

EXTERIOR ELEVATIONS

This and all other project documents and all ideas, aesthetics and designs incorporated herein are instruments of service and shall remain the property of Harbison International (HI) and cannot be lawfully used in whole or in part for any project or purpose except as described in the contractual agreement between HI and the Client. HI retains all common law, statutory and other reserved rights, including the copyright. Unauthorized use of these documents by any party other than HI and HI's consultants (limited to but not only unlawful but also constitutes a theft of services) involved will entitle to fully indemnify and defend HI and HI's consultants, to the maximum legal extent against all losses, damages, claims or liabilities arising directly or indirectly from project document misuse.

Project documents describe design intent of work and are not a representation of the manner, means or methods of construction. HI and HI's consultants shall not be responsible concerning the accuracy of documents and are not responsible for any discrepancies between project documents and the existing conditions.

REGISTERED PROFESSIONAL ENGINEER
MIKE A. HAMZY
No. 23273
Exp. 12-31-11
CIVIL
STATE OF CALIFORNIA

HARBISON INTERNATIONAL INC.
ENGINEERS – SURVEYORS – PLANNERS
2755 E. SHAW AVE., SUITE 101, FRESNO, CA 93710
PHONE: (559) 294-7485 FAX: (559) 294-7481

PRINCE TRUCK STOP

NWC OF STATE ROUTE 99 &
STATE ROUTE 166 (MARICOPA HWY)
BAKERSFIELD, CA 93313

REVISIONS		
No.	Date	Description

Drawn: DWD
Checked: MAH
Approved: MIKE A. HAMZY

Project No: 09-208
Date: 06/16/2011

Title: EXTERIOR ELEVATIONS

Sheet No. A6.2

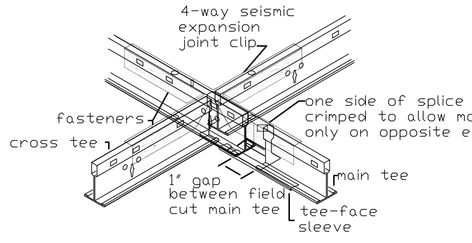

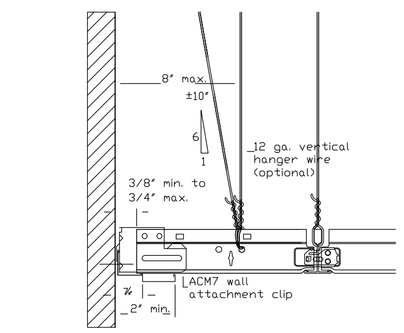

Cross Tee with MS 274 2" Perimeter Molding
IBC Categories D, E, F

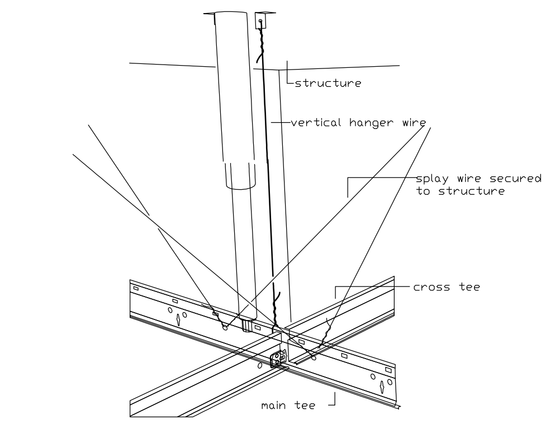

SEISMIC PERSPECTIVE

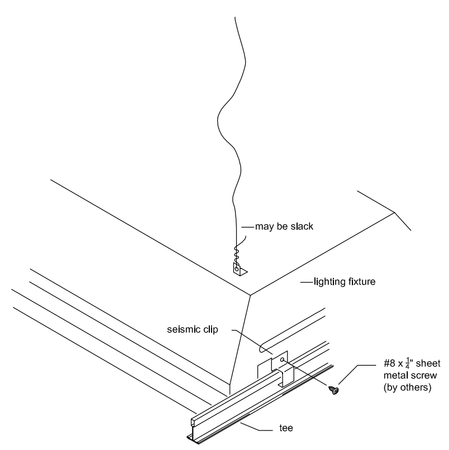

Type G Light Fixture Attached to Grid

NOM	ACTUAL	D/6	D/4	D/3
4"	3 1/2"	9/16"	7/8"	1 1/8"
6"	5 1/2"	7/8"	1 3/8"	1 3/4"
8"	7 1/4"	1 1/8"	1 3/4"	2 3/8"
10"	9 1/4"	1 1/2"	2 1/4"	3"
12"	11 1/4"	1 7/8"	2 3/4"	3 3/4"
14"	13 1/4"	2 1/8"	3 1/4"	4 3/8"

STUD WIDTH	NOTCHING	BORING	
SIZE	NOM. ACTUAL	25%	40%	60%
2X4	4" 3 1/2"	7/8"	1 3/8"	2 1/8"
2X6	6" 5 1/2"	1 3/8"	2 1/8"	3 1/4"

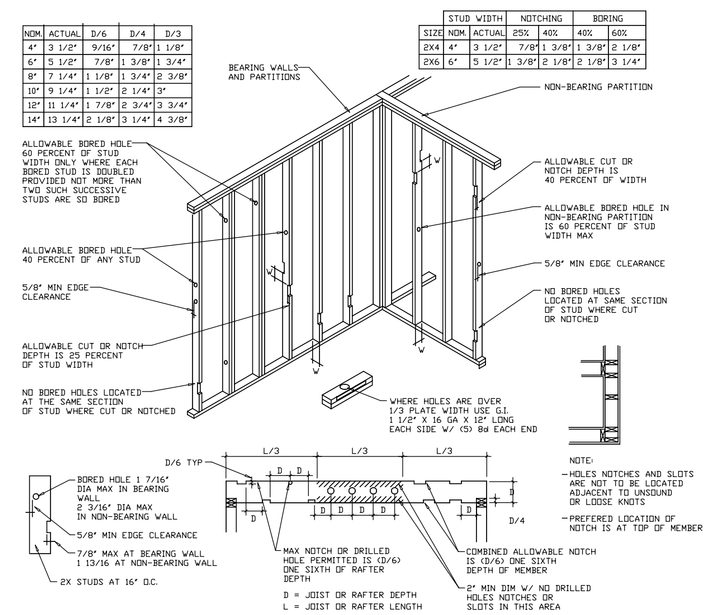

CUTTING NOTCHING AND BORING

NO SCALE

6 TYP. HEADER SUPPORT @ 6' WIDE & LESS SHEARWALL

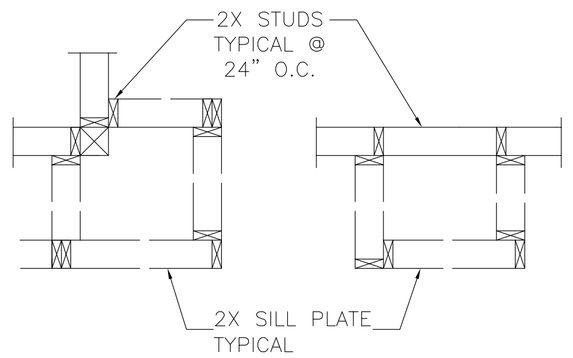

4 S1.1 TYP. @ FRAMING DETAIL @ POP-OUT

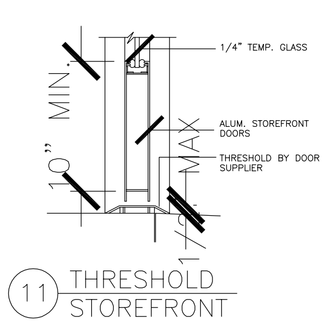

11 THRESHOLD STOREFRONT

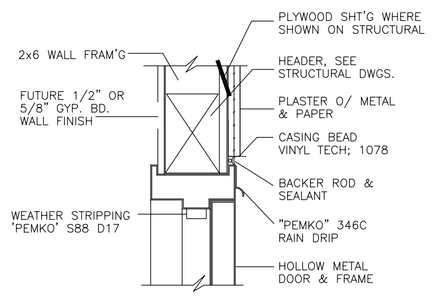

6 HEAD DETAIL @ HM DOOR
NOTE: JAMB SIMILAR

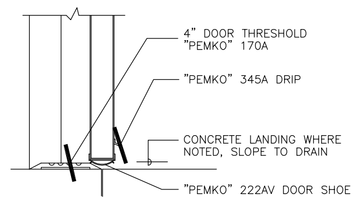

8 THRESHOLD @ HM DOOR

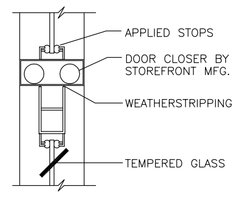

7 DOOR HEAD, STOREFRONT

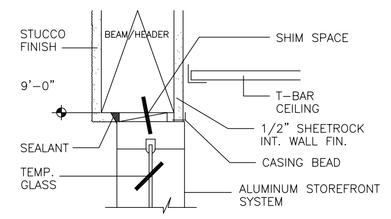

1 HEAD @ STOREFRONT

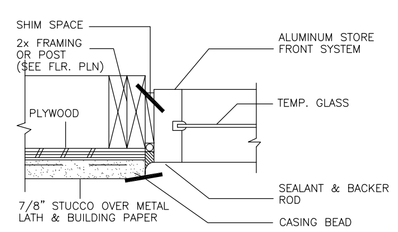

3 STOREFRONT JAMB

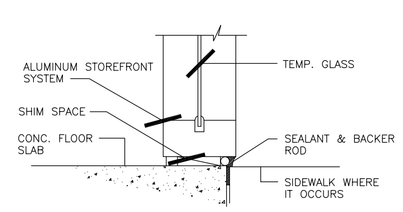

2 STOREFRONT SILL

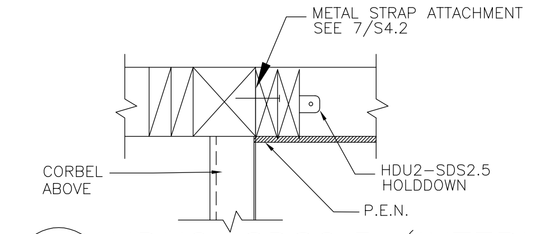

3 S1.1 HDU2-SDS2.5 (INTERIOR) HOLDDOWN SCALE 1"=1'-0"

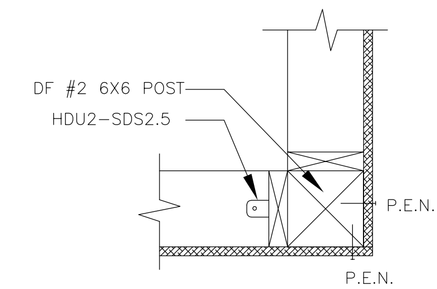

2 S1.1 HOLDDOWN TYP. @ CORNER

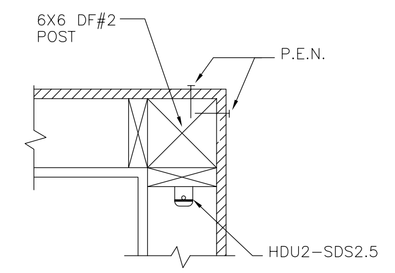

1 S1.1 FRAMING @ HOLDDOWN SCALE 1"=1'-0"

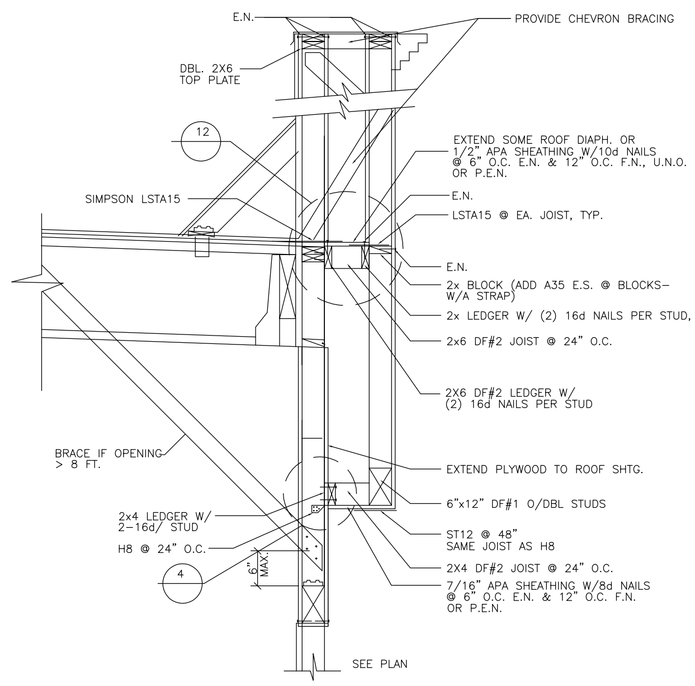

8 S4.2 POP-OUT FRAMING STICK FRAME OPTION

STANDARD DETAILS

This and all other project documents and all ideas, aesthetics and designs incorporated therein are property of HARBISON INTERNATIONAL INC. and shall not be used in whole or in part for any project or purpose except as described in the contractual agreement between HI and the Client. HI retains all common law, statutory and other reserved rights, including the copyright thereto. Client (lessee) is not only grateful but also contractually bound to guard against any misuse by any party involved with misuse of HI's documents. Client (lessee) agrees to fully indemnify and defend HI and HI's consultants, to the maximum legal extent against all losses, demands, claims or liabilities arising directly or indirectly from project document misuse. Project documents describe design intent of work, and are not a representation of the finished product. Contractor is solely responsible for all means and methods of construction, including concerning the accuracy of documents and are not responsible for any discrepancies between project documents and the existing conditions.

HARBISON INTERNATIONAL INC.
ENGINEERS - SURVEYORS - PLANNERS
2755 E. SHAW AVE., SUITE 101, FRESNO, CA 93710
PHONE: (559) 294-7485 FAX: (559) 294-7481

REGISTERED PROFESSIONAL ENGINEER MICHAEL H WINN No. 23273 Exp. 12-31-11 CIVIL STATE OF CALIFORNIA

PRINCE TRUCK STOP
NWC OF STATE ROUTE 99 & STATE ROUTE 166 (MARICOPA HWY)
BAKERSFIELD, CA 93313

REVISIONS		
No.	Date	Description

Drawn: DWD
Checked: MAH
Approved: MIKE A. HAMZY

Project No: 09-208
Date: 06/16/2011

Title: STANDARD DETAILS

Sheet No. A8.1

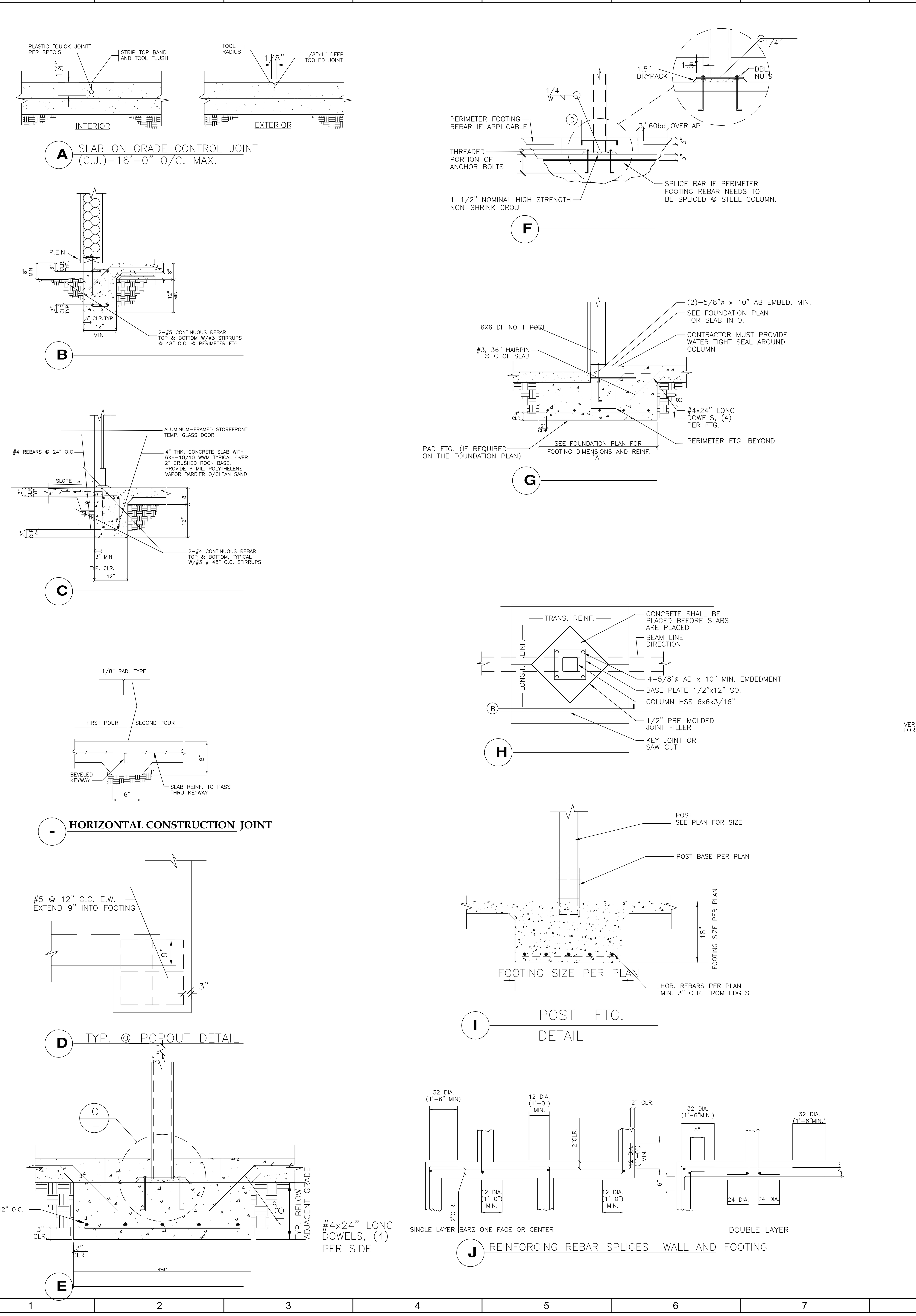

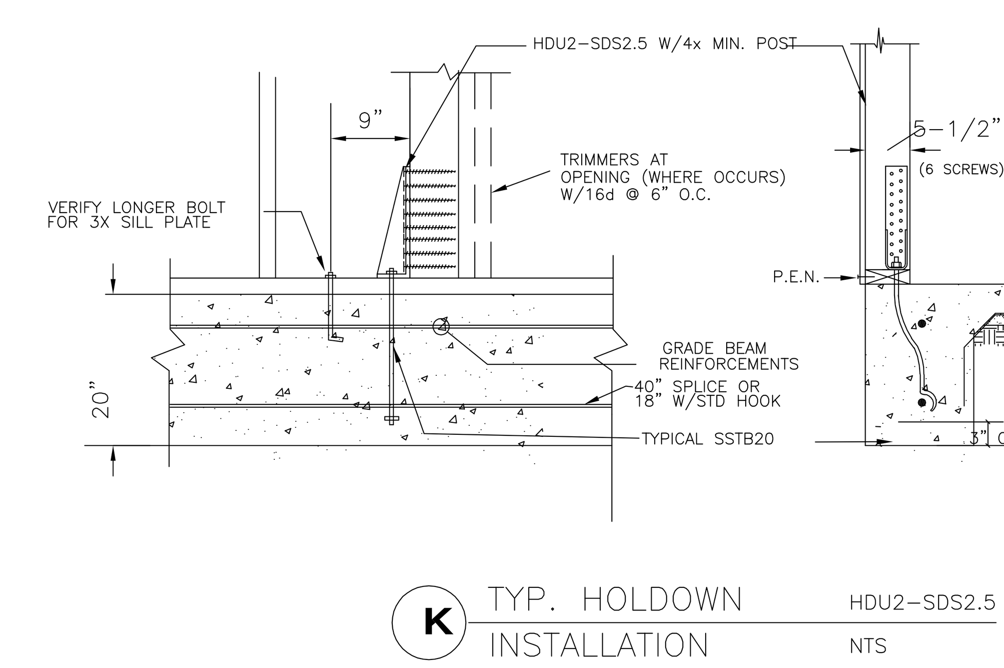

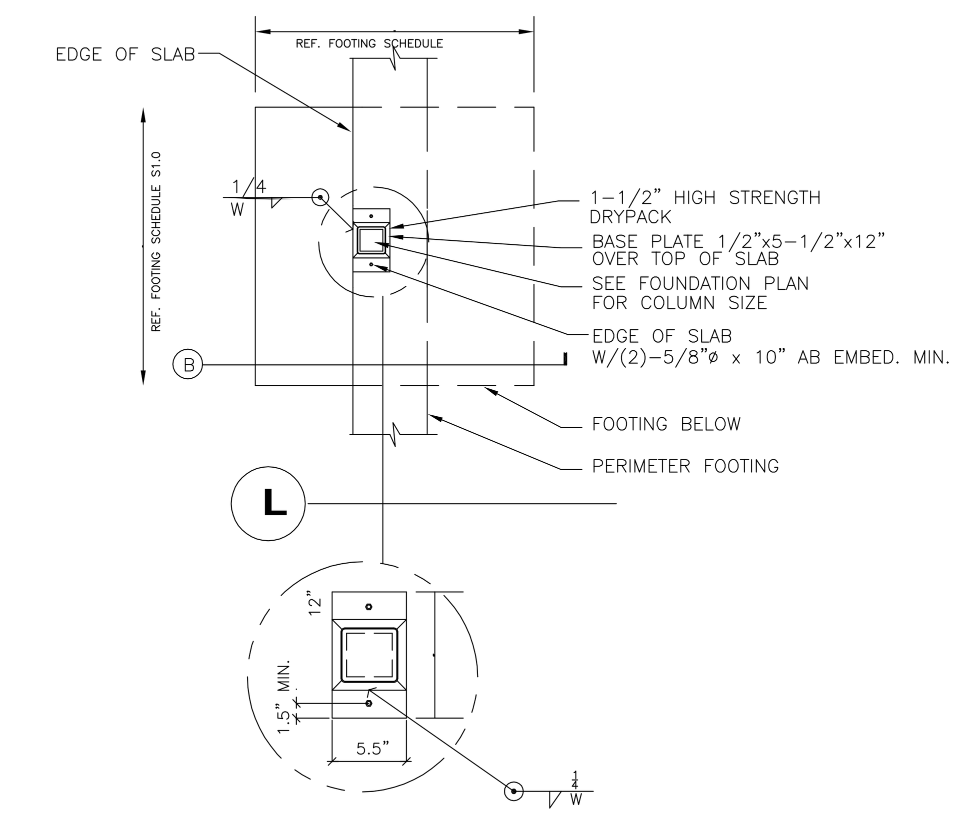

TYP. NOTES

*1. PROVIDE SPECIAL INSP. FOR EPOXY-INSTALLED ANCHOR BOLTS. SIMPSON ET 22 (ICBO #4945)
2. IF INSTALLATION PROCEDURE NOT INSPECTED, THE BOLT SHALL BE PULL TESTED FOR TWICE THE DESIGN UPLIFT LOAD.

FOUNDATION NOTES

1. CONTRACTORS SHALL VERIFY ALL DIMENSIONS, GRADES AND OTHER SITE CONDITIONS AT JOB SITE BEFORE COMMENCING WITH WORK, DISCREPANCIES SHALL BE REPORTED TO PROJECT DESIGNER FOR CORRECTION.
2. ALL CONCRETE SHALL BE 3,000 PSI IN 28 DAYS. CALC'D @ 2,500 PSI
3. FINISH FLOOR SHALL BE ABOVE THE CENTERLINE OF STREET AND 6" ABOVE FINISH GRADE. FOOTINGS SHALL EXTEND A MIN. OF 12" INTO UNDISTURBED SOIL. UNO. FTG. WIDTH 12" MIN. PER UBC – (9-7).
4. ALL FOUNDATION PLATES SHALL BE PRESSURE TREATED DF AND ANCHORED WITH 1/2 DIA. x 10" A.B. @ 6'-0" O.C. MAX, W/2"SQx3/16" STEEL PLATE WASHERS (12" FROM CORNERS AND PLATE SPLICES) WITH A MIN. EMBEDMENT OF 7" AT INTERIOR NON-BEARING PARTITION: HILTI SILL PINS DN-72, 3"x.145" DIA. @ 32" O.C.
5. PROVIDE 2x6 DF PRESSURED TREATED SLEEPER AT ALL EXT. DOORS.
6. CERAMIC TILE AND TERRAZZO SHALL BE SET IN A FULL GROUT BED, DEPRESS SLAB 1 1/2" AT ALL TILE LOCATION. TILE JOINTS SHALL BE THOROUGHLY GROUTED WITH WATERPROOF GROUT. (VERIFY WITH OWNER & TILE SETTER)
7. ALL TUBS AND SHOWER OPENING SHALL BE RODENT PROOF, WITH 1" CEMENT COVERING IN AN APPROVED MANNER.
8. PROVIDE MIN. OF 20'-0" OF 1/2" REBAR OR #4 AWG (BARE COPPER CONDUCTOR) ENCASED IN CONCRETE WITH A MIN OF 2" OF COVERAGE, STUB OUT OF FOOTING AT PANEL VERIFY LOCATION OF SERVICE W/ OWNER.
9. ALL REINFORCED STEEL SHALL MEET ASTM-615, LATEST EDITION (INTER-MEDIATE GRADE) WWF: ASTM-A/185
10. CONCRETE SHALL BE A MIN. OF 4.5 SACK MIX WITH A MAX. AGGREGATE SIZE OF 1" AND SHALL DEVELOPE A MIN. COMPRESSIVE STREGHTH OF 2,500 PSI @ 28 DAYS. SLUMP SHALL NOT EXCEED 3 1/2".
11. MAX. ALLOWABLE SOIL BEARING PRESSURE=2,000 PSF.
12. THE CONTRACTOR SHALL BE RESPONSIBLE FOR PROPER WATER CURING OF ALL CONCRETE AFTER INSTALLATION. FOR AT LEAST 10 CONSECUTIVE DAYS.
13. DIMENSIOMS ARE TO FACE OF EXTERIOR WALLS AND CONCRETE OR CONCRETE BLOCK WALLS AND TO THE CENTERLINE OF INTERIOR STUD WALLS, POSTS COLUMNS.
14. SEE DETAIL SHEET FOR STUD WALL SIZES TO OBTAIN PROPER SIZE SILL PLATES, SILL BOLT SIZE AND SPACING.
15. PROVIDE MASONRY VENEER, (5" MA. THICKNESS), W/ 1/2" MIN. AIRSPACE O/KRAFT PAPER , OR FELT PAPER BACKING CONNECT W/22 GA. x#1 G.I. VENEER TIES , NAIL W/(1) 10 D EACH STUD/TILE. SPACED MAX. 24" O.C. HORIZONTALLY & 20 PER TIE, (MAX. SPACING).
16. ALL PIPING PASSING THRU SLAB SHALL BE WRAPPED W/ 3/4" THICK LAYER OF FOAM. GALVANIZED PIPING UNDER SLAB SHALL BE WRAPPED W/40 MILS OF PLASTIC SHEET OR PLASTIC TAPE.
17. LOCATE AND EXPOSE ALL PROPERTY CORNERS AND STRING SIDE YARDS PROPERTY LINES PRIOR TO FOUNDATION INSPECTION.
18. FINISH FLOOR MUST BE AT LEAST 1" ABOVE 100 YEARS FLOOD PLAIN LEVEL.
19. PROVIDE #4 REBAR @ TOP & BOTTOM OF ALL PERIMETER FTGS./BEARING WALLS.
20. PROVIDE 8" WIRE MESH @ HOUSE SLABS.
21. ALL POSTS FOOTING 12" DEEP. UNO.
22. MAX. FLOOR LEVEL CHANGE @ DOOR IS 1" @ THRESHOLD.(OPTION)
23. PROVIDE #3 x 24" LONG DOWELS @ 24" O.C. AND 12" FROM CORNERS AT ALL CONCRETE STOOPS AND PORCHES.
24. ALL ANCHORS, BOLTS, INSERTS & ANY OTHER HARDWARE TO BE SET IN CONCRETE SHALL BE FIRM SET IN POSITION BEFORE CONCRETE IS PLACED.
25. SPLICES IN CONTINUOS BARS OF FOOTINGS, WALL ECT.. SHALL BE AT LEAST 40 DIAMETERS . ALL REINFORCING STEEL SHALL BE SECURELY WIRED IN PLACE AND SHALL BE PROPERLY SUPPORTED WITH OR BOLSTERS AWAY FROM FORMS. STAGGER SPLICES OF ADJACENT BARS AT MIN. OF 5'-0".
26. ALL DIMENSIONS SHOWN FOR LOCATION OF REINFORCED STEEL ARE TO FACE OF BAR AND DENOTE CLEAR COVERAGE. FOR FOOTINGS, DIMEN-SIONS ARE TO MAIN BARS, UNLESS SPECIFICALLY NOTED, CONCRETE COVERAGE SHALL BE AS FOLLOWS:

3" WHERE CONCRETE IS DEPOSITED AGAINST GROUND (EXCEPT SLABS)
2" WHERE CONCRETE IS EXPOSED TO GROUND BUT PLACED IN FORMS
2" FOR MAIN BARS OF TIED COULMNS
1 1/2" FOR MAIN BARS OF BEAMS.
1" FOR WALL BARS. UNO.
3/4" FOR BARS IN SLABS ON FORMS.
1 1/2" FOR BARS IN SLABS ON GROUND.

REINFORCING:

1. REINFORCING STEEL SHALL BE INTERMEDIATE GRADE DEFORMED BARS CONFORMING TO A.S.T.M. DESIGNATION A-615, GRADE 40 FOR #3. GRADE 60 FOR #4 & LARGER (UNLESS OTHERWISE NOTED) WITH FABRICATION DETAILS CONFORMING TO THE A.C.I. MANUAL OF STANDARD PRACTICE.
2. SPLICES IN REINFORCING STEEL SHALL LAP 40 BAR DIAMETERS IN MASONRY AND 62 DIAMETERS IN CONCRETE, UNLESS OTHERWISE NOTED. SPLICES ON ADJACENT BARS SHALL NOT BE LESS THAN 5'-0" APART. BARS MAY BE WIRED TOGETHER AT SPLICES EXCEPT FOR TOP REINFORCING OF BEAMS AND SLABS WHERE BARS SHALL BE SEPARATED 1-1/2" CLEAR. USE STANDARD HOOKS TO END ALL BARS WHERE STANDARD RIGHT ANGLE BENDS ARE NOT POSSIBLE.
3. ALL WELDING OF REINFORCING STEEL SHALL BE WITH LOW HYDROGEN ELECTRODES UNLESS OTHERWISE NOTED.
4. ALL REINFORCING SHALL HAVE A MINIMUM CONCRETE COVER AS FOLLOWS (UNLESS OTHERWISE NOTED) :
   - A. SURFACES POURED AGAINST EARTH....................3"
   - B. FORMED SURFACES EXPOSED TO EARTH OR WEATHER BARS LARGER THAN #5............2"
   - C. SLABS OR WALLS NOT EXPOSED TO GROUND OR WEATHER....................3/4"
   - D. BEAMS AND GIRDERS....................1-1/2"
   - E. JOISTS....................3/4"
   - F. COLUMNS....................1-1/2"
   - G. WEATHER BARS #5 & SMALLER....................1-1/2"

FOUNDATION DETAILS

This and all other project documents and all ideas, aesthetics and designs incorporated therein are instruments of service. All project documents are the registered property of Harbison International (HI) and cannot be lawfully used in whole or in part for any project or purpose except as described in the contractual agreement between HI and the Client. HI hereby gives formal notice that any such project document use, reproduction, or modification (misuse) is not only unlawful but also automatically binds all parties involved with misuse to fully indemnify and defend HI and HI's consultants to the maximum legal extent against all losses, demands, claims or liabilities arising directly or indirectly from project document misuse.

Project documents describe design intent of work and are not a representation of the as-built or existing conditions. HI and HI's consultants make no representations concerning the accuracy of documents and are not responsible for any discrepancies between project documents and the existing conditions.

REGISTERED PROFESSIONAL ENGINEER — DALE H WINN — No. 23273 — Exp. 12-31-11 — CIVIL — STATE OF CALIFORNIA

HARBISON INTERNATIONAL INC.
ENGINEERS – SURVEYORS – PLANNERS
2755 E. SHAW AVE., SUITE 101, FRESNO, CA 93710
PHONE: (559) 294-7485 FAX: (559) 294-7481

PRINCE TRUCK STOP
NWC OF STATE ROUTE 99 & STATE ROUTE 166 (MARICOPA HWY) BAKERSFIELD, CA 93313

REVISIONS		
No.	Date	Description
–	–	–
–	–	–
–	–	–
–	–	–
–	–	–
–	–	–
–	–	–

Drawn: DWD
Checked: MAH
Approved: MIKE A. HAMZY
Project No: 09-208
Date: 06/16/2011

Title: FOUNDATION DTEAILS

Sheet No. A8.2

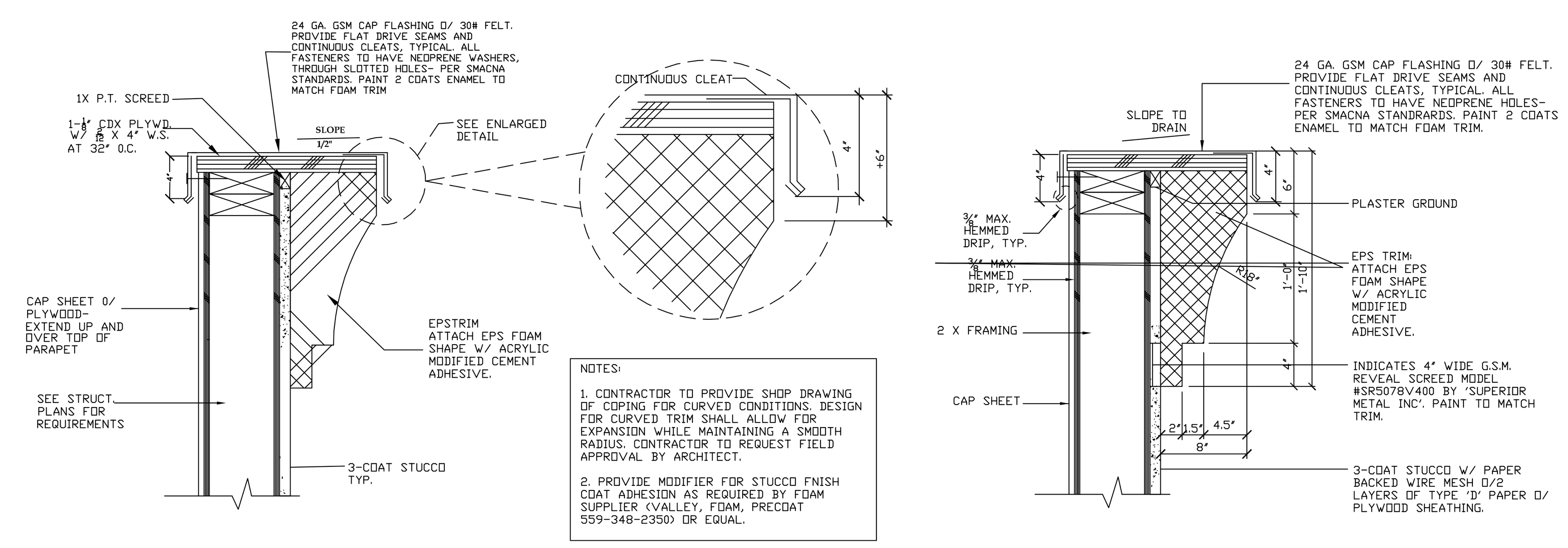

9 DECO FOAM

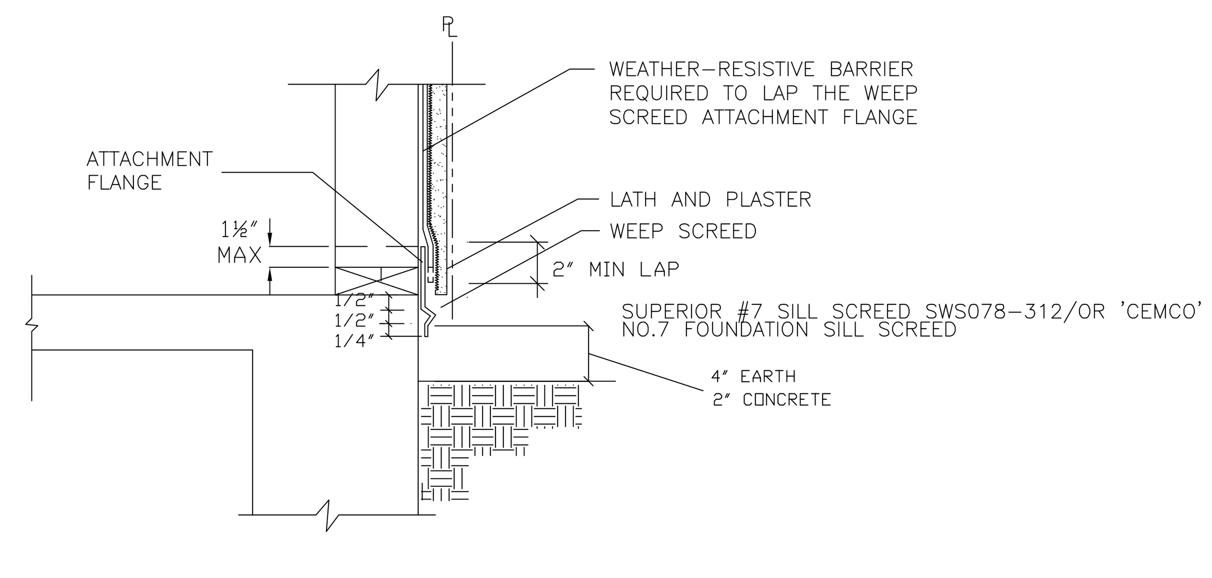

12 WEEP SCREED PER 2007 CBC 2512.1.2 DETAILS

FRAMING NOTES

ALL LUMBER 2" TO 4" OR LESS IN WIDTH SHALL BE D.F. #2 OR BETTER AND 6" OR WIDER SHALL BE D.F. #1 OR BETTER.

ALL WORK SHALL BE DONE IN ACCORDANCE W/- THESE DRAWINGS, UBC, AND ALL OTHER APPLICABLE CODES.

STRUCTURAL CALCULATIONS OF ALL PRE-FABRICATED TRUSSES SHALL BE FURNISHED BY TRUSS FABRICATOR. ROOF MOUNTED EQUIPMENT WEIGHTS SHALL BE INCLUDED IN ANALYSIS.

TRUSS FABRICATOR SHALL FURNISH SCHEMATIC LAYOUT OF ALL TRUSSES, SEQUENCE OF ERECTION AND INSTALLATION TO ARCHITECT BEFORE PROCEEDING W/- CONSTRUCTION.

VERIFY ALL DIMENSIONS, ELEVATIONS, OPENINGS, SIDEWALKS AND RAMPS, ETC. W/- ARCHITECTURAL DRAWINGS.

ALL STRUCTURAL STEEL SHALL BE ASTM A36, BOLTS A307.

INDICATES ELEVATION TO TOP OF PLYWOOD SHEETING WITH RESPECT TO FIN. FLOOR ELEVATION DATUM 0'-0".

VERIFY WEIGHTS AND LOCATIONS OF A/C UNITS AND ALL OTHER EQUIPMENTS SUPPORTED ON THE ROOF W/- MECHANICAL DRAWINGS.

ALL UNCLEAR DETAILS OR DISCREPANCIES IN THESE DRAWINGS SHALL BE BROUGHT TO ARCHITECTS ATTENTION PRIOR TO PROCEEDING W/- CONSTRUCTION.

FURNISH SHOP DRAWINGS OF ALL STRUCTURAL WORK TO ARCHITECT FOR REVIEW BEFORE PROCEEDING WITH CONSTRUCTION.

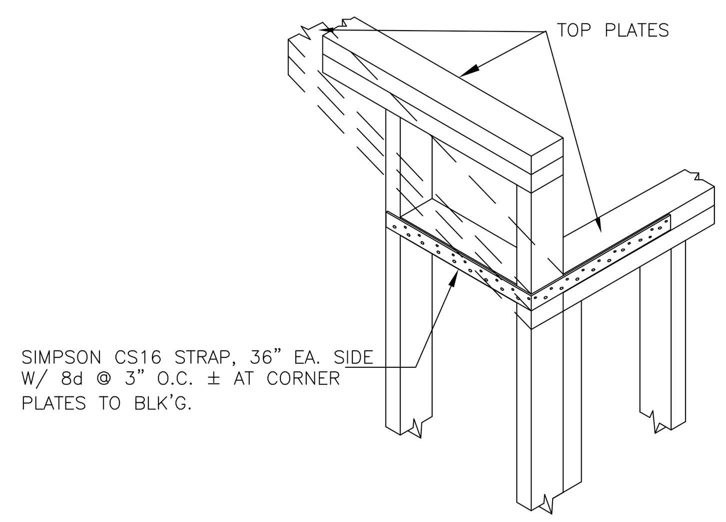

5 TYPICAL STRAP DETAIL WHERE OCCURS

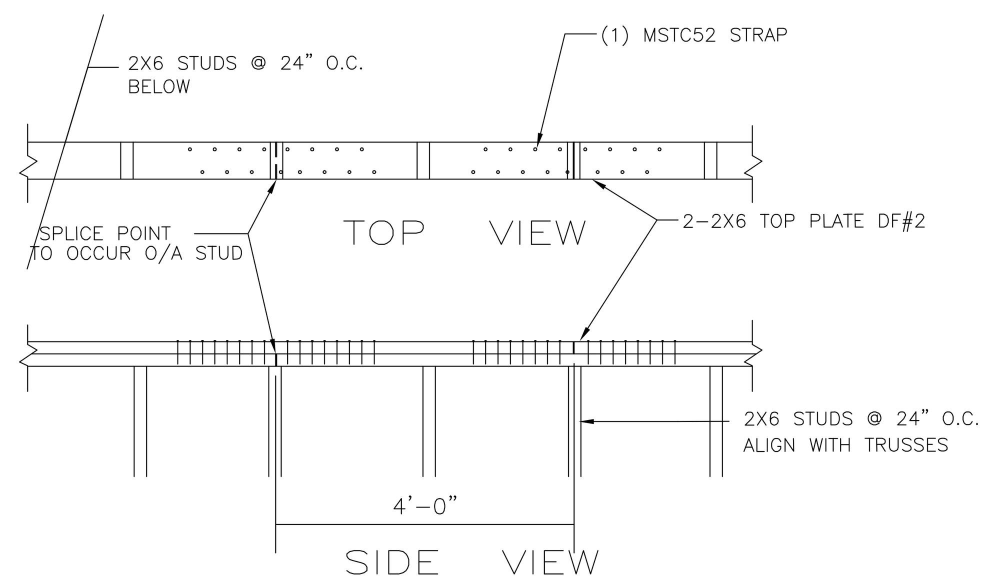

2/S2 SPLICE DETAIL
SCALE 1/2" = 1'-0"

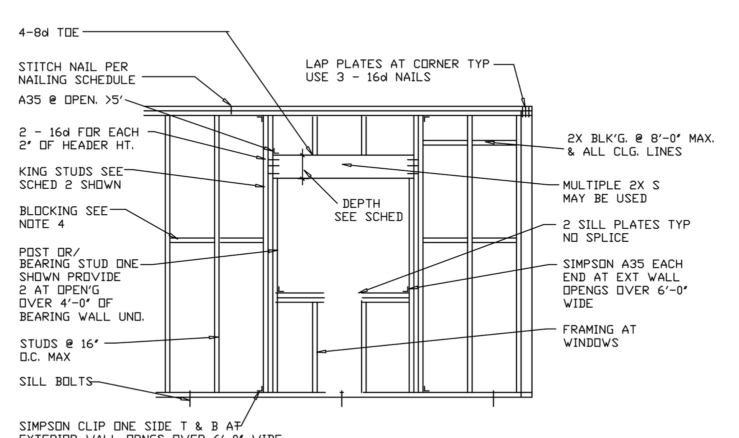

HEADER SPAN	HEADER DEPTH BEARING WALL	HEADER DEPTH NON-BR'G WALL	NO. OF KING STUDS EXTERIOR WALL	NO. OF KING STUDS INTERIOR WALL
UP TO 4'-0"	6"	4"	1	1
OVER 4' TO 6'-0"	8"	6"	2	1
OVER 6' TO 8'-0"	10"	8"	2	1
OVER 8' TO 10'-0"	12"	10"	2	2

NOTES:
1. HEADER DEPTH SHOWN ON TABLE IS NOMINAL. HEADER WIDTH SHALL BE THE SAME AS THE STUDS
2. SEE NAILING SCHEDULE FOR TYP. NAILING. STITCH NAIL ALL MULTIPLE STUDS PER SCHEDULE
3. USE SIMPSON LS30 OR A34 @ 2X4 STUDS, LS50 OR A35 @ 2X6 STUDS, LS70 @ 2X8 STUDS AND LS90 @ 2X10 STUDS
4. BLOCKING REQUIRED AT ALL PLYWOOD SPLICES, CEILING LINES, 10'-0" O.C. MAX FOR FIRE BLOCKING

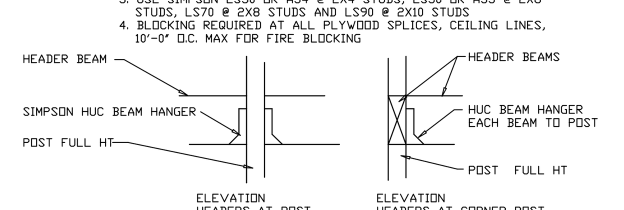

TYP WALL AND OPENING FRAMING
NO SCALE

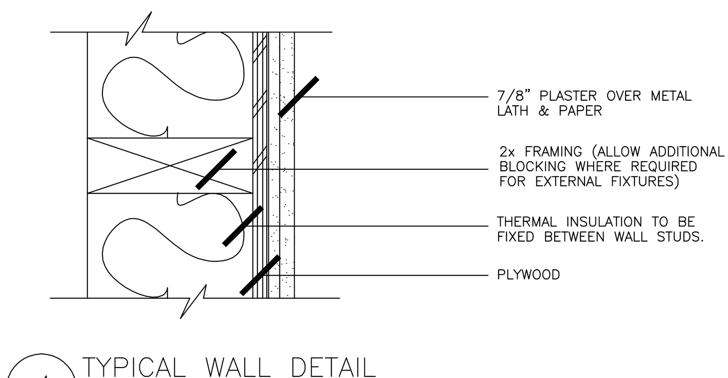

4 TYPICAL WALL DETAIL

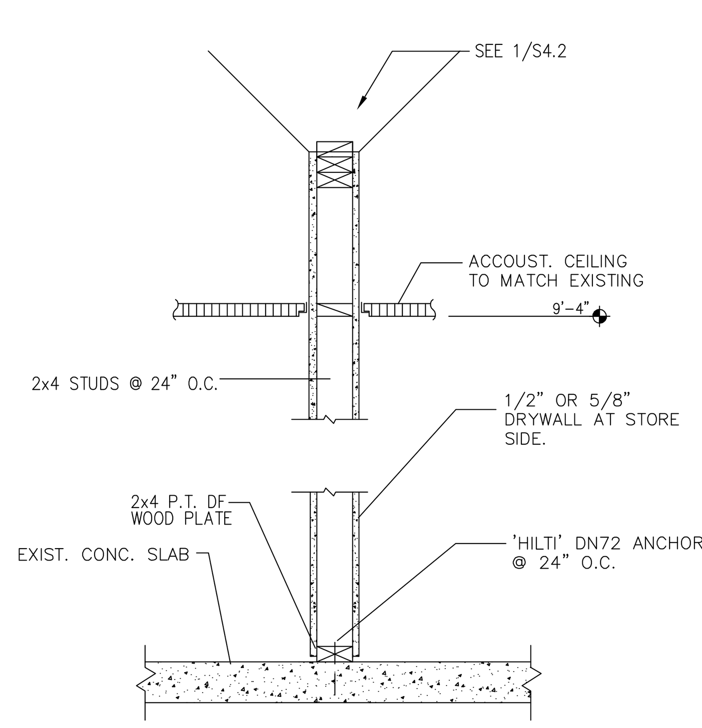

2 TYP. PARTITION WALL DETAIL

NAILING SCHEDULE (2007 CBC)

CONNECTION	FASTENING[a,m]	LOCATION
1. Joist to sill or girder	3-8d common (2 1/2"x0.131) 3-3"x 0.131" nails 3-3" 14 gage staples	toenail
2. Bridging to joist	2-8d common (2 1/2"x0.131") 2-3"x 0.131" nails 2-3" 14 gage staples	toenail each end
3. 1"x6" subfloor or less to each joist	2-8d common (2 1/2"x0.131")	face nail
4. Wider than 1"x6" subfloor to each joist	3-8d common (2 1/2"x0.131")	face nail
5. 2" subfloor to joist or girder	2-16d common (3 1/2"x0.162")	bind and face nail
6. Sole plate to joist or blocking	16d (3 1/2"x0.135") at 16" o.c. 3"x 0.131" nails at 8" o.c. 3" 14 gage staples at 12" o.c.	typical face nail
Sole plate to joist or blocking at braced wall panel	3"-16d (3 1/2"x0.135" at 16" 4"-3"x 0.131" nails at 16" 4"-3" 14 gage staples per 16"	brace wall panels
7. Top plate to stud	2"-16d common (3 1/2"x0.162") 3-3"x 0.131" nails 3"-3" 14 gage staples	end nail
8. Stud to sole plate	4-8d common (2 1/2"x0.131") 4-3"x 0.131"nails 3"-3" 14 gage staples	toenail
	2-16d common (3 1/2"x0.162") 3-3"x0.131"nails 3"-3" 14 gage staples	end nail
9. Double studs	16d (3 1/2"x0.135") at 24"o.c. 3"x 0.131"nail at 8" o.c. 3" 14gage staples at 8"o.c.	face nail
10. Double top plate	16d (3 1/2"x0.135") at 16"o.c. 3"x0.131"nail at 12" o.c. 3" 14gage staples at 12"o.c.	typical face nail
Double top plate	8-16d common (3 1/2"x0.162") 12-3"x 0.131" nails 12-3" 14 gage staples	lap splicel
11. Blocking between joist or rafters to top plate	3-8d (common 2 1/2"x0.131") 3"-3"x 0.131" nails 3"-3" 14gage staples	toenail
12. Rim joist to top plate	8d (2 1/2"x0.131") at 6"o.c. 3"-3"x 0.131" nails at 6"o.c. 3"-3" 14gage staples at 6"o.c.	toenail
13. Top plate laps and intersections	2-16d common (3 1/2"x0.162") 3"-3"x 0.131" nails 3"-3" 14gage staples	face nail
14. Continous header, two pices	16d common (3 1/2"x0.162")	16" o.c. along edge
15. Ceiling joist to plate	3-8d common (2 1/2"x0.131") 5-3"x 0.131" nails 5-3" 14gage staples	toenail
16. Continuous header to stud	4-8d common (2 1/2"x0.131")	toenail
17. Ceiling joists, laps over partitions (see Section 2308.10.4.1, Table 2308.10.4.1)	3-16d common (3 1/2"x0.162") minimum, Table 2308.10.4.1 4-3"x 0.131" nails 4-3" 14 gage staples	face nail
18. Ceiling joists to parallel rafters (see Section 2308.10.4.1, Table 2308.10.1)	3-16d common (3 1/2"x0.162") minimum, Table 2308.10.4.1 4-3"x 0.131" nails 4-3" 14 gage staples	face nail
19. Rafter to plate (see Section 2308.10.4.1, Table 2308.10.1)	3-8d common (2 1/2"x0.131") 3-3"x 0.131" nails 3-3" 14 gage staples	toenail
20. 1" diagonal brace to each stud and plate	2-8d common (2 1/2"x0.131") 2-3"x 0.131" nails 3-3" 14 gage staples	face nail
21. 1" x 8" sheathing to each bearing	3-8d common (2 1/2"x0.131")	face nail
22. Wider than 1"x 8" sheathing to each bearing	3-8d common (2 1/2"x0.131")	face nail
23. Built-up corner studs	16d common (3 1/2"x0.162") 3"x 0.131" nails 3" 14 gage staples	24" o.c. 16" o.c. 16" o.c.
24. Built-up girder and beams	20d common (4"x0.192") 32"O.c. 3"x0.131" nail at 24" o.c. 3" 14 gage staple at 24" o.c. 2-20d common (4"x0.192") 3-3"x 0.131" nails 3-3" 14 gage staples	face nail at ends and at each splice

CONNECTION	FASTENING	LOCATION
25. 2" planks	16d common (3 1/2"x0.162")	at each bearing
26. Collar tie to rafter	3-10d common (3"x0.148") 4-3"x 0.131" nails 4-3" 14 gage staples	face nail
27. Jack rafter to hip	3-10d common (3"x0.148") 4-3"x 0.131" nails 4-3" 14 gage staples	toenail
	2-16d common (3 1/2"x0.162") 3-3"x0.131" nails 3-3" 14 gage staples	face nail
28. Roof rafter to 2-by ridge beam	2-16d common (3"x0.162") 3-3"x 0.131" nails 3-3" 14 gage staples	toenail
	2-16d common (3 1/2"x0.162") 3-3"x 0.131" nails 3-3" 14 gage staples	face nail
29. Joist to band joist	3-16d common (3"x0.162") 4-3"x 0.131" nails 4-3" 14 gage staples	face nail
30. Ledger strip	3-16d common (3"x0.162") 4-3"x 0.131" nails 4-3" 14 gage staples	face nail
31. Wood structural panels and particleboard[b] Subfloor, roof and wall sheathing (to framing)	1/2" and less 6d[c,l] 2 3/8"x0.113"nail[n] 1 3/4" 16 gage[o] 19/32"to 3/4" 8d or 6d[e] 2 3/8"x0.113"nail[p] 2" 16 gage[p] 7/8" to 1" 8d[c] 1 1/8" to 1 1/4" 10d[d] or 8d[d]	
Single Floor (combination subfloor-underlayment to framing)	3/4" and less 6d[e] 7/8" to 1" 8d[e] 1 1/8" to 1 1/4" 10d[d] or 8d[e]	
32. Panel siding (to framing)	1/2" and less 6d[f] 5/8" 8d[f]	
33. Fiberboard sheathing[g]	1/2" No. 11 gage roofing nail[h] 6d common nail (2" x0113") No. 16 gage staple[i] 25/32" No. 11 gage roofing nail[h] 8d common nail (2 1/2 x01.1") No. 16 gage staple[i]	
34. Interior paneling	1/4" 4d[j] 3/8" 6d[k]	

For SI 1 inch=24.4 mm.

a. Common or box nails may be used except where otherwise stated.
b. Nails spaced at 6 inches on center at edges, 12 inches at intermediate supports except 6 inches at supports where spans are 48 inches or more. For nailing of wood structural panel and particleboard diaphragms and shear walls, refer to Sections 2305. Nails for wall sheathing may be common, box or casing.
c. Common or deformed shank (6d-2"x 0.113", 8d-2 1/2"x 0.131", 10d-3"x 0.148")
d. Common (6d-2"x 0.113", 8d-2 1/2"x 0.131", 10d-3"x 0.148")
e. Deformed Shank (6d-2"x 0.113", 8d-2 1/2"x 0.131', 10d-3"x 0.148")
f. Corrosion-resistant siding (6d-1 7/8"x0.106", 8d-2 3/8"x0.128") or casing (6d-2 1/2"x0.113") nail.
g. Fasteners spaced 3 inches on center at exterior edges and 6 inches on center at intermediate supports, when used as structural sheathing. Shall be 6 inches o.c. on the edges and 12 inches o.c. at intermediate support for nonstructural applications.
h. Corrosion-resistant roofing nails with 7/16 inch-diameter head and 1 1/2-inch length for 1/2-inch sheathing and 1 3/4-inch length for 25/32-inch sheathing.
i. Corrosion-resistant staples with nominal 7/16-inch crown and 1 1/8-inch length for 1/2-inch sheathing and 1 1/2-inch length for 25/32-inch sheathing. Panel supports at 16 inches (20 inches if stregth axis in the long direction of the panel, unless otherwise marked).
j. Casing (1 1/2"x0.080") or finish (1 1/2"x0.072") nails spaced 6 inches on panel edges, 12 inches at intermediate supports.
k. Panel supports at 24 inches . Casing or finish nails spaced 6 inches on panel edges, 12 inches at intermediate supports.
l. For roof sheathing application, 8d nails (2 1/2"x0.113") are the minimum required for wood structural panels.
m. Staples shall have a minimum crown width of 7/16 inch.
n. For roof sheathing applications, fasteners spaced 4 inches o.c. at edges, 8 inches at intermediate supports.
o. Fasteners spaced 4 inches o.c. at edges, 8 inches at intermediate supports for subfloor and wall sheathing and 3 inches o.c. at edges, 6 inches at intermediate supports for roof sheating.
p. Fasteners spaced 4 inches o.c. at edges, 8 inches at intermediate supports.

FRAMING DETAILS

This and all other project documents and all ideas, aesthetics and designs incorporated therein are instruments of service. All project documents are the registered property of Harbison International (HI) and cannot be lawfully used in whole or in part for any project or purpose except as described in the contractual agreement between HI and the Client. HI hereby gives formal notice that any such project document use, reproduction, or modification (misuse) is not only unlawful but also automatically binds all parties involved with misuse to fully indemnify and defend HI and HI's consultants to the maximum legal extent against all losses, demands, claims or liabilities arising directly or indirectly from project document misuse.

Project documents describe design intent of work and are not a representation of the as-built or existing conditions. HI and HI's consultants make no representations concerning the accuracy of documents and are not responsible for any discrepancies between project documents and the existing conditions.

REGISTERED PROFESSIONAL ENGINEER DALE H WINN No. 23273 Exp. 12-31-11 CIVIL STATE OF CALIFORNIA

HARBISON INTERNATIONAL INC.
ENGINEERS - SURVEYORS - PLANNERS
2755 E. SHAW AVE., SUITE 101, FRESNO, CA 93710
PHONE: (559) 294-7485 FAX: (559) 294-7481

PRINCE TRUCK STOP
NWC OF STATE ROUTE 99 &
STATE ROUTE 166 (MARICOPA HWY)
BAKERSFIELD, CA 93313

REVISIONS		
No.	Date	Description
-	-	-
-	-	-
-	-	-
-	-	-
-	-	-
-	-	-
-	-	-

Drawn: DWD
Checked: MAH
Approved: MIKE A. HAMZY
Project No: 09-208
Date: 06/16/2011

Title: FRAMING DETAILS

Sheet No. A8.3

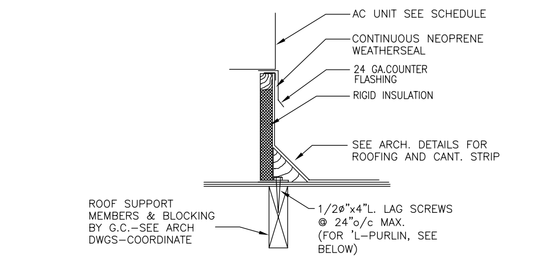

2 AC UNIT ROOF CURB MOUNTING
NTS

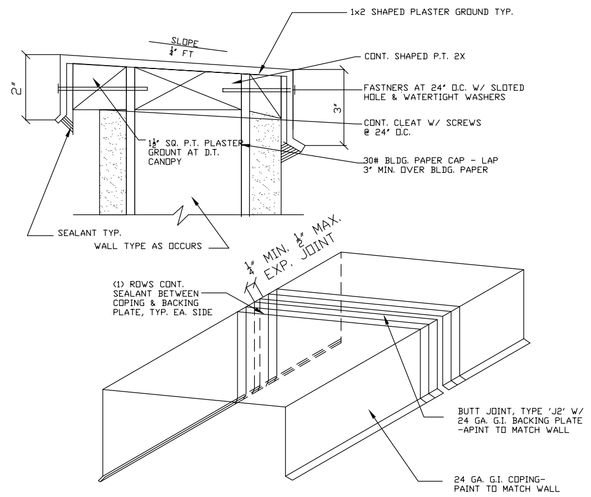

11 COPING JOINT DETAIL

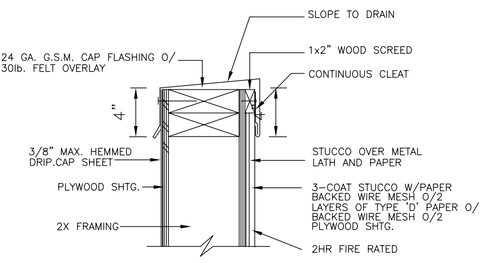

5 PARAPET CAP DETAIL
SEE 1/A3 FOR DECO FOAM

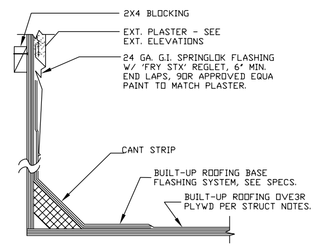

12 TYPICAL REGLET FLASHING

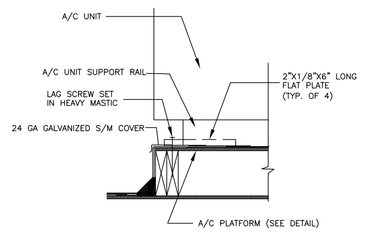

9 A2 A/C UNIT SUPPORT DETAIL (FUTURE)

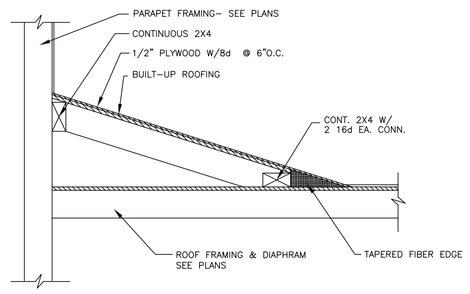

1 PLYWOOD CRICKET DETAIL

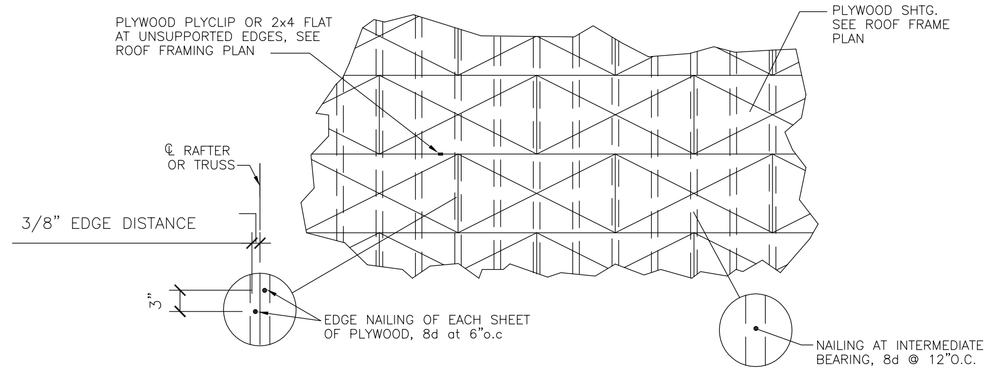

1 PLYWOOD ROOF SHEATHING
NOTE: NO PLYWOOD PIECE LESS THAN 2'–0" IN THE LEAST DIMENSION AND 8 SQ. FT. IN TOTAL AREA SHALL BE USED.

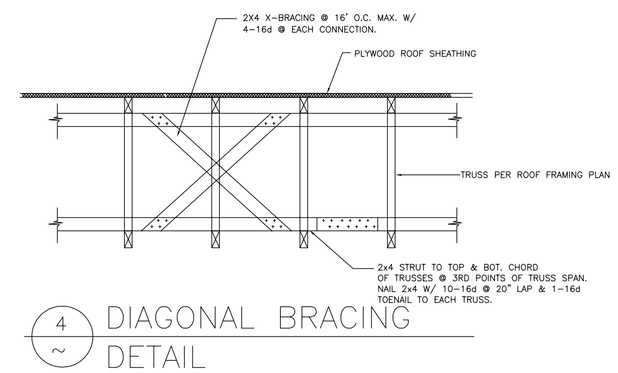

4 DIAGONAL BRACING DETAIL

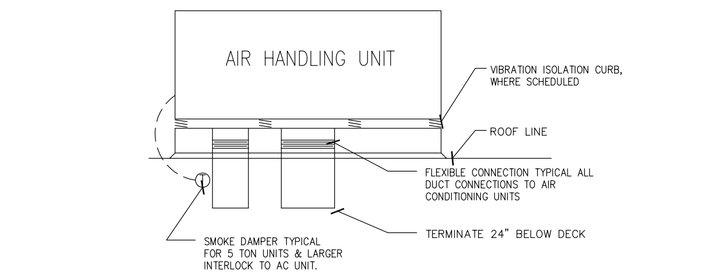

1 AIR HANDLING UNIT DETAIL
NTS

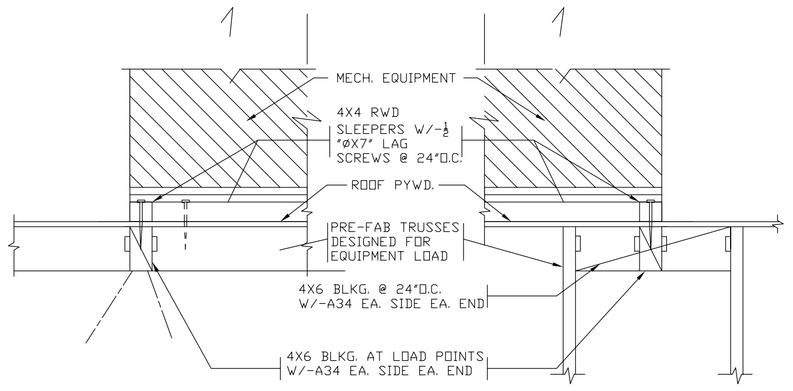

10 TYP. MECH. EQUIPMENT SUPPORT DETAIL

PARAPET/CRICKET BRACE			
MAX. BRACE OR STUD LENGTH	BRACE OR STUD MEMBER	BRACE ATTACHMENT AT TOP (# OF NAILS TO STUD)	OPTIONAL STRONG BACK ATTACHMENT
0'–4'	2X4 DF#2	(2) 10d NAILS	–––
4'–8'	2X6 DF#2	(3) 10d NAILS	3 – 16d
8'–10'	2X8 DF#2	(4) 10d NAILS	4 – 16d
10'–13'	2X10 DF#2	(5) 10d NAILS	5 – 16d
13'–16'	2X12 DF#2	(6) 10d NAILS	6 – 16d

NOTE: THE STUD SIZE MAY ONLY BE CHOSEN FROM THIS CHART WHEN THE STUD IS ON TOP OF THE DIAPHRAGM, SEE FOUNDATION PLAN FOR WALL STUD INFO.

3 A2 STANDARD CRICKET BRACE @ WOOD WALLS

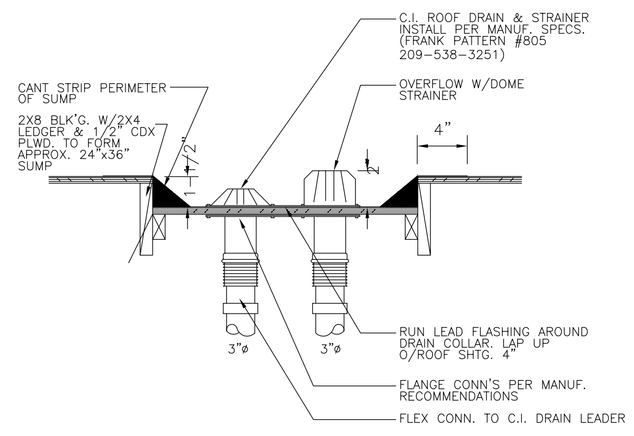

3 TYPICAL ROOF DRAIN

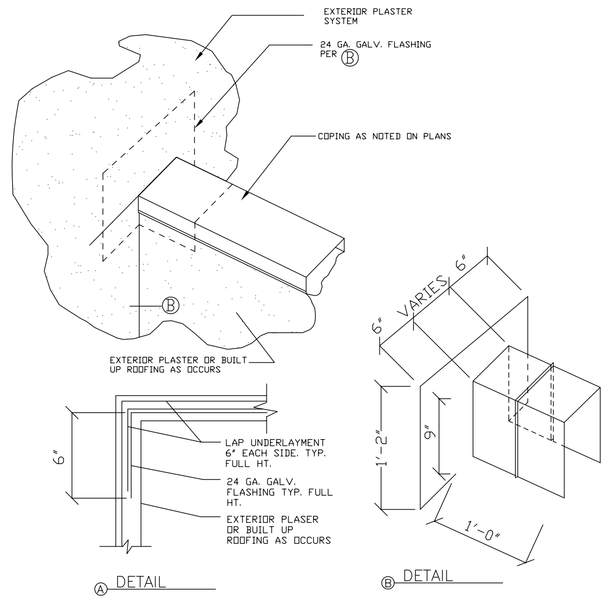

13 TYPICAL PERPENDICULAR WALL FLASHING

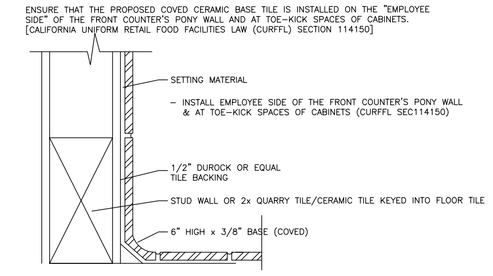

4 RESTROOM TILE COVE DETAIL OPTION

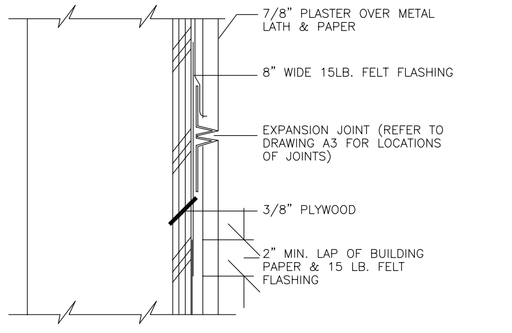

10 STUCCO EXPANSION JOINT

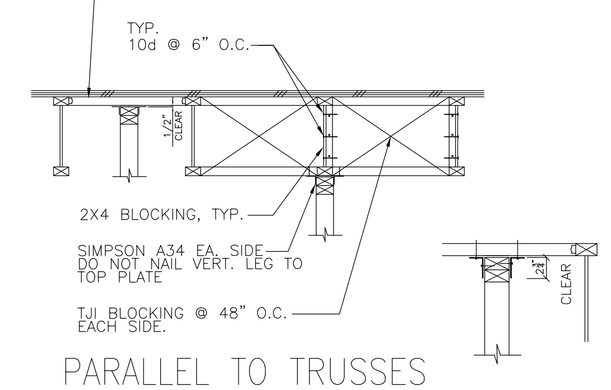

PARALLEL TO TRUSSES

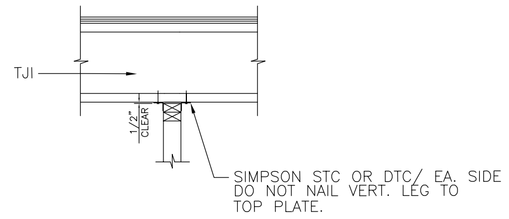

PERPENDICULAR TO TRUSSES

1 NON–BEARING TOP PLATE CONNECTION TO TJI's

FRAMING & ROOF DETAILS

This and all other project documents and all ideas, aesthetics and designs incorporated therein are the property of Harbison International (HI) and cannot be used in whole or in part for any project or purpose except as described in the contractual agreement between HI and the Client. HI (Harbison International) shall not be responsible for any modifications made to these documents by any party other than HI. The Client agrees to indemnify and hold HI and HI's consultants harmless from all claims, damages, losses, demands, claims or liabilities arising directly or indirectly from project document misuse.

HARBISON INTERNATIONAL INC.
ENGINEERS – SURVEYORS – PLANNERS
2755 E. SHAW AVE., SUITE 101, FRESNO, CA 93710
PHONE: (559) 294–7485 FAX: (559) 294–7481

REGISTERED PROFESSIONAL ENGINEER DALE H WINN No. 23273 Exp. 12–31–11 CIVIL STATE OF CALIFORNIA

PRINCE TRUCK STOP
NWC OF STATE ROUTE 99 & STATE ROUTE 166 (MARICOPA HWY)
BAKERSFIELD, CA 93313

REVISIONS			
No.	Date	Description	

Drawn: DWD
Checked: MAH
Approved: MIKE A. HAMZY

Project No: 09-208
Date: 06/16/2011

Title: ROOF DETAILS

Sheet No.
A8.4

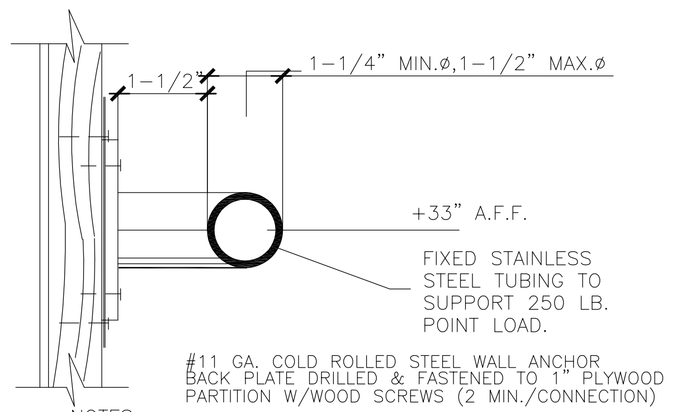

NOTES:
PROVIDE 1-1/2"ø GRAB MOUNTED AT 1-1/2" FROM WALL.
GRAB BARS SHALL BE SECURED TO WALLS W/3 SUPPORTS.

3 GRAB BAR

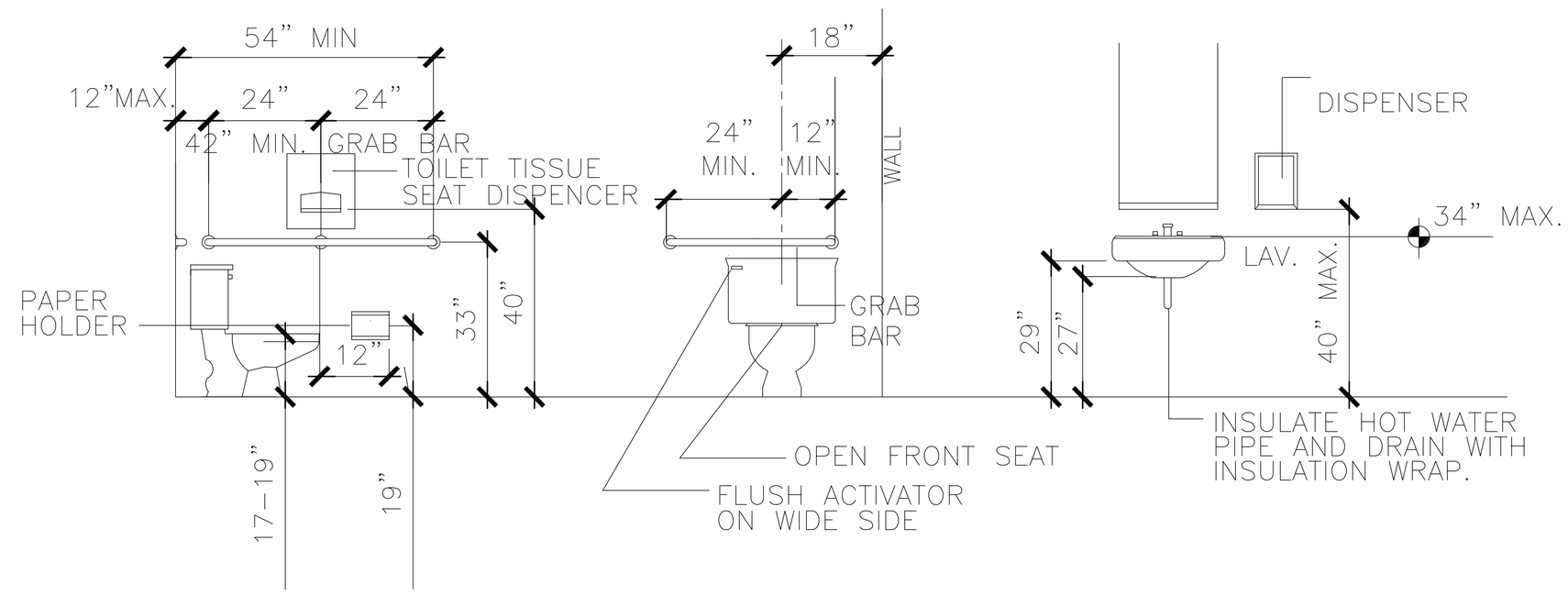

1 HANDICAP STANDARDS

N.T.S.

ALL TOILET ROOM ACCESSORIES SHALL BE MOUNTED AT 40" MAX.
CLEARANCE UNDER LAV. SHALL BE 8" DEEP FOR KNEES AND 9" HIGH BY 17" DEEP FOR TOES.
URINAL TO BE A MIN. 14" DEEP BY MAX. 17" HIGH TO URINAL RM.

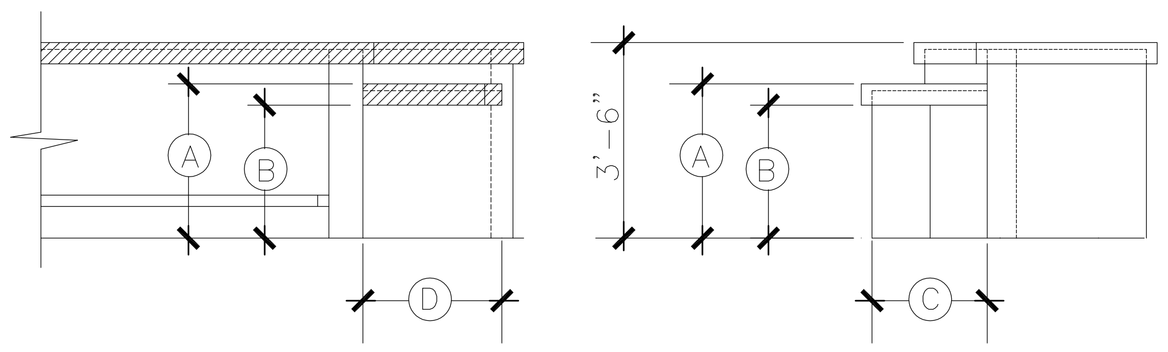

FRONT VIEW SIDE VIEW

A- TOP DECK NO HIGHER THAN 34"
B- CLEAR KNEE SPACE MINIMUM 27" HIGH
C- CLEAR KNEE SPACE MIN. 19" DEEP (FRONT TO BACK)
D- CLEAR KNEE SPACE MIN. 36" WIDE.

6 DISABLED COUNTER FRONT APPROACH OPTION

OTHERWISE USE SIDE REACH (TYPICAL)
NTS

RESTROOM IDENTIFICATION SYMBOLS ON DOORWAYS LEADING TO THE MENS AND WOMENS SANITARY FACILITY. PROVIDE THE SIGNS DESCRIBED IN THE FOLLOWING SKETCH. CENTER SIGNS ON DOOR.

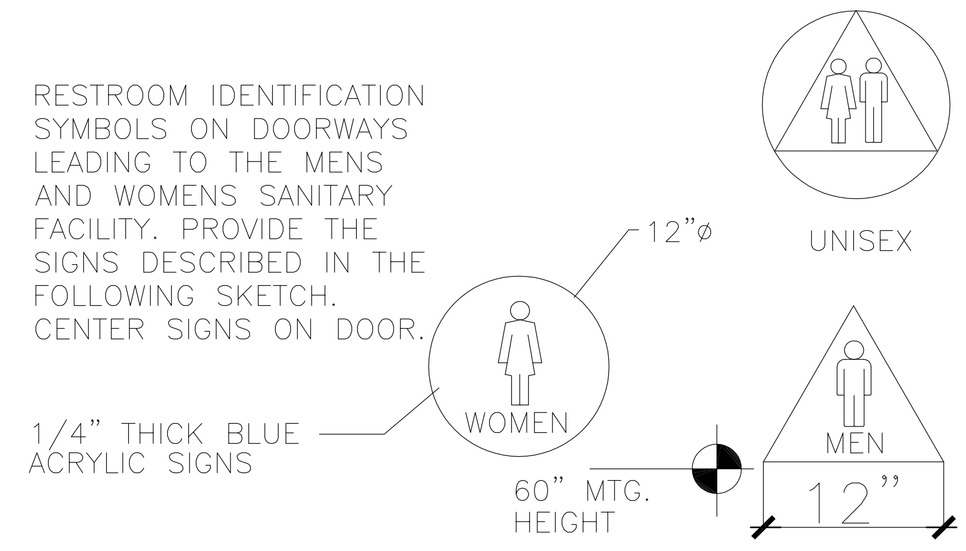

{ FOR UNISEX SIGN SEE NOTE 22/A1 }

2 RESTROOM SIGN

STD. ACCESSIBILITY DETAILS

This and all other project documents and all ideas, aesthetics and designs incorporated herein, as instruments of service, are and shall remain the property of Harbison International (HI) and cannot be lawfully used in whole or in part for any project or purpose except as described in the contractual agreement between HI and the Client. HI grants no express or implied rights to any unauthorized use. Any such unauthorized use of these documents is and will continue to be at the sole risk of the user and without liability to HI. Client agrees to fully indemnify and defend HI and HI's consultants to the maximum legal extent against all losses, damages, claims or liabilities arising directly or indirectly from project document misuse.
Project documents describe design intent of work, and are not a representation of the actual as-built conditions. HI and HI's consultants shall not be responsible for any discrepancies concerning the accuracy of documents and are not responsible for any discrepancies between project documents and the existing conditions.

REGISTERED PROFESSIONAL ENGINEER STATE OF CALIFORNIA
MICHAEL H. WINN
No. 23273
Exp. 12-31-11
CIVIL

HARBISON INTERNATIONAL INC.
ENGINEERS - SURVEYORS - PLANNERS
2755 E. SHAW AVE., SUITE 101, FRESNO, CA 93710
PHONE: (559) 294-7485 FAX: (559) 294-7481

PRINCE TRUCK STOP
NWC OF STATE ROUTE 99 & STATE ROUTE 166 (MARICOPA HWY)
BAKERSFIELD, CA 93313

REVISIONS

No.	Date	Description

Drawn: DWD
Checked: MAH
Approved: MIKE A. HAMZY

Project No: 09-208
Date: 06/16/2011

Title: ACC DETAILS

Sheet No. A8.5

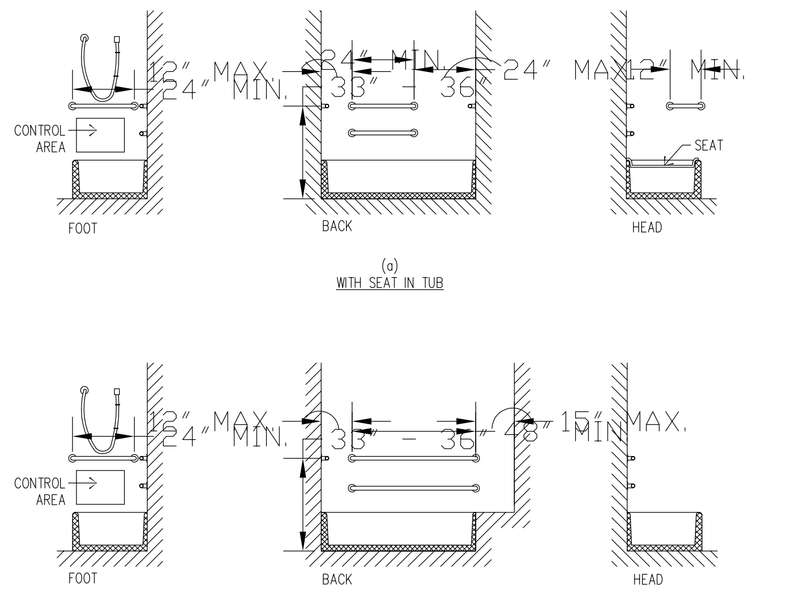

GRAB BARS @ BATHTUBS
N.T.S.

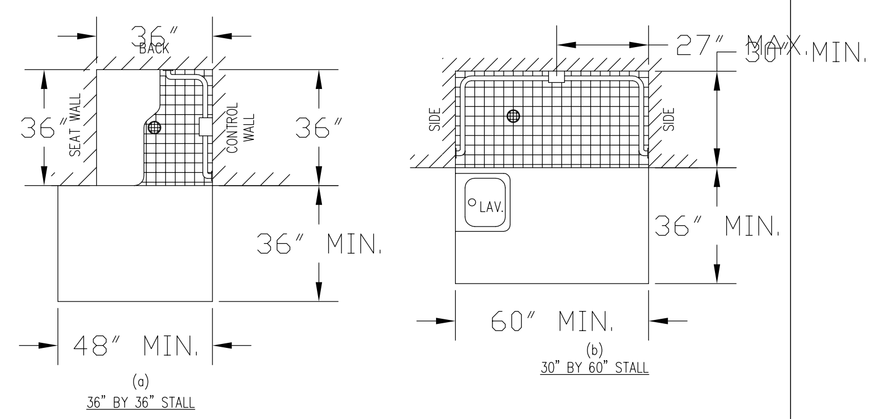

SHOWER SIZES AND CLEARANCES
N.T.S.

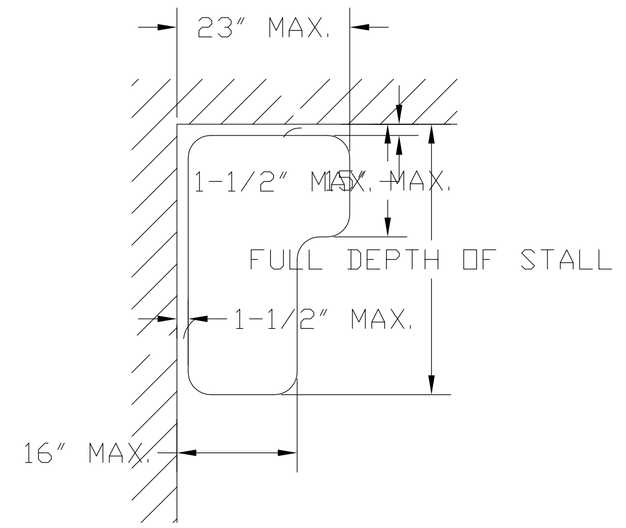

SHOWER SEAT DESIGN
N.T.S.

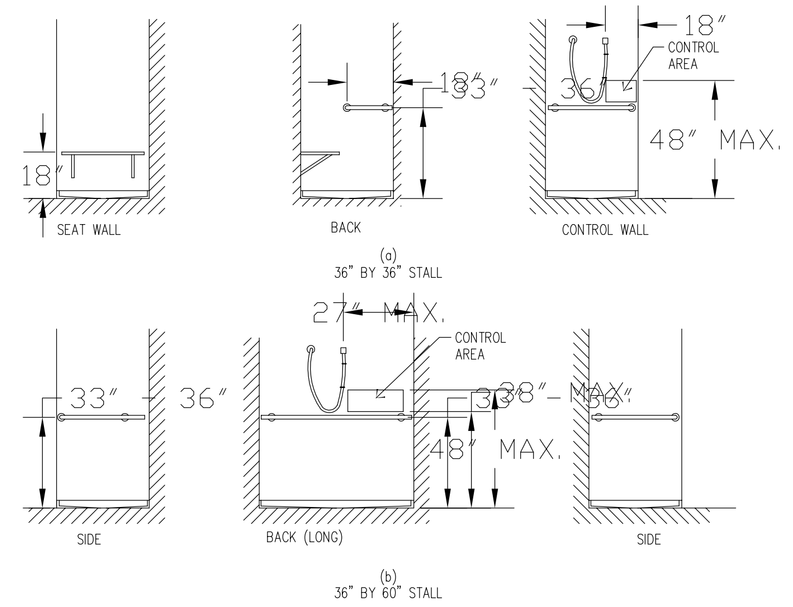

NOTE: SHOWERHEAD AND CONTROL AREA MAY BE ON BACK (LONG) WALL (AS SHOWN) OR ON EITHER SIDE WALL.

GRAB BARS AT SHOWER STALLS
N.T.S.

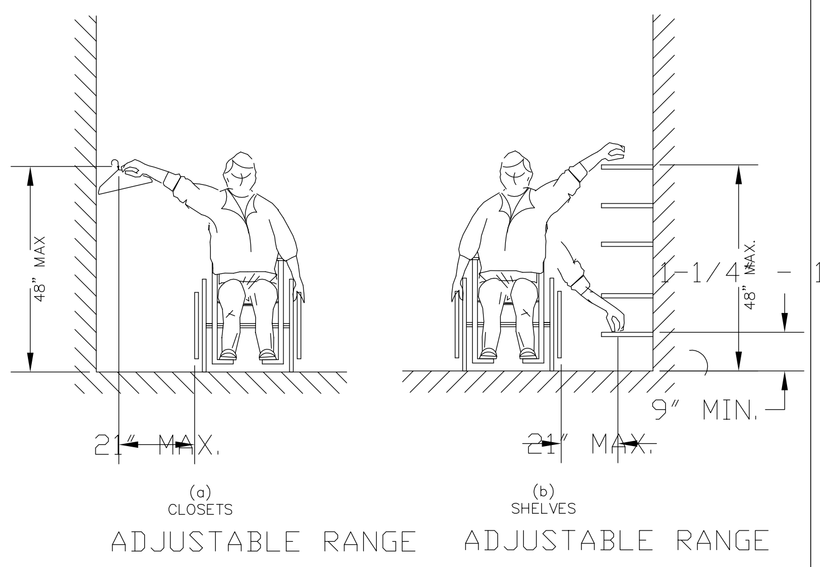

CLOSETS AND STORAGE SHELVES
N.T.S.

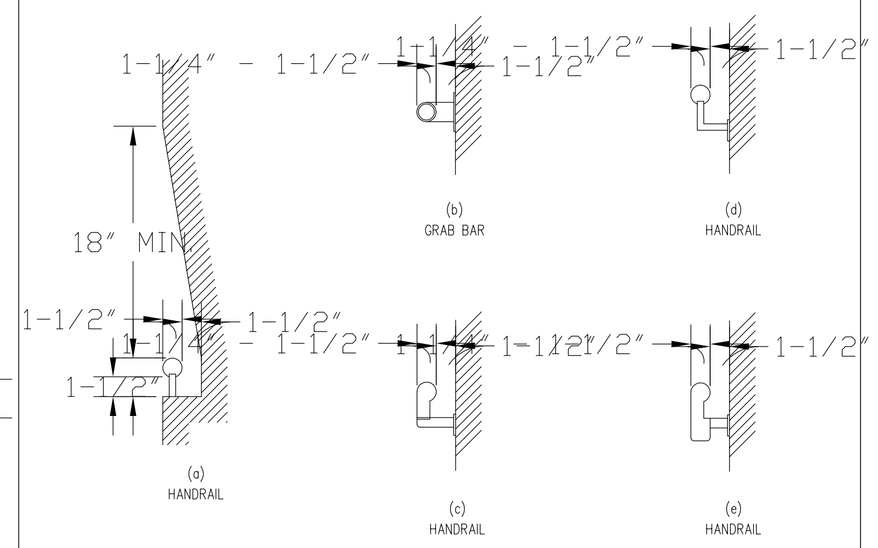

SIZE & SPACING OF HANDRAILS & GRAB BARS
N.T.S.

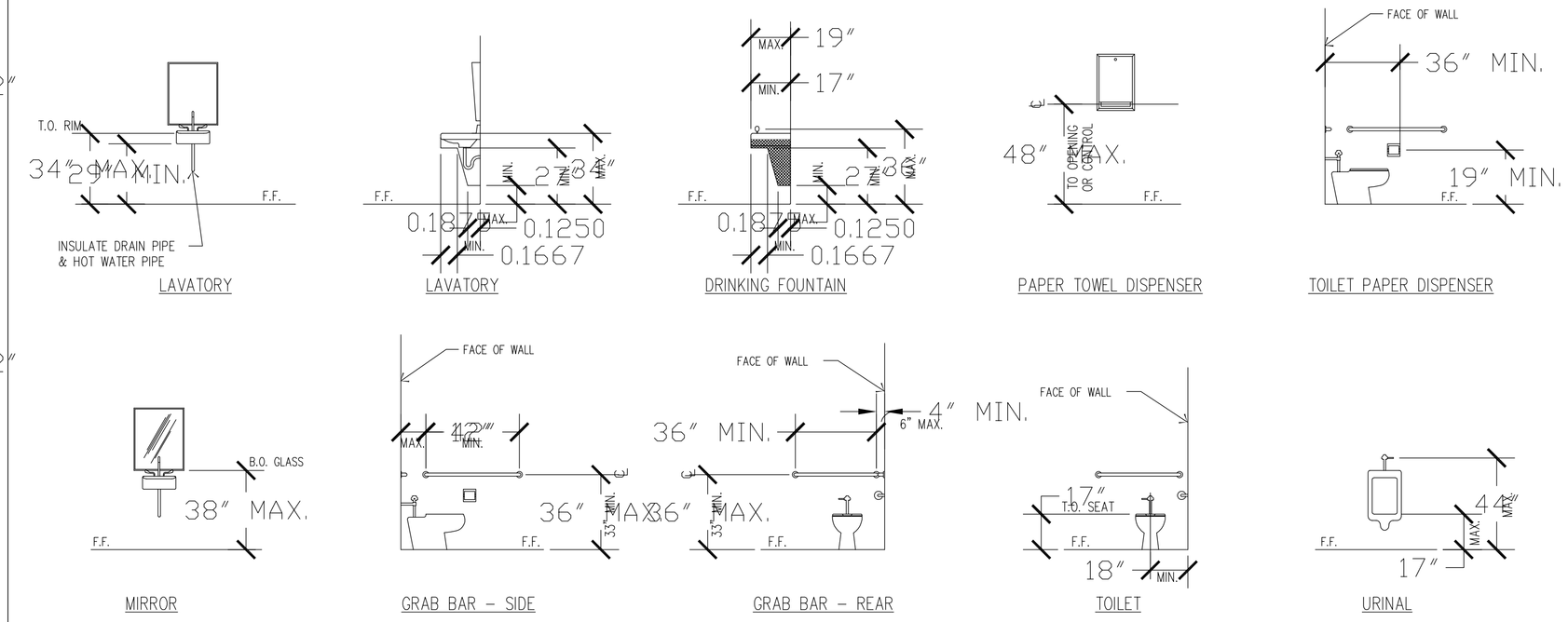

A.D.A. FIXTURE MOUNTING HEIGHTS
1/4" = 1'-0"

STD. ACCESSIBILITY DETAILS

This and all other project documents and all ideas, aesthetics and designs incorporated therein are instruments of service and shall remain the property of Harbison International (HI) and cannot be lawfully used in whole or in part for any project or purpose except as described in the contractual agreement between HI and the Client. HI retains all rights under statutory and common law, including but not limited to, copyright. Unauthorized use and/or duplication of these documents by all parties involved will misuse to fully indemnify and defend HI and HI's consultants, to the maximum legal extent against all losses, demands, claims or liabilities arising directly or indirectly from project document misuse.
Project documents describe design intent of work, and are not a representation of the finished project. Contractor shall review and be responsible for any discrepancies between project documents and the existing conditions.

REGISTERED PROFESSIONAL ENGINEER
STATE H WINN
No. 23273
Exp. 12-31-11
CIVIL
STATE OF CALIFORNIA

HARBISON INTERNATIONAL INC.
ENGINEERS - SURVEYORS - PLANNERS
2755 E. SHAW AVE., SUITE 101, FRESNO, CA 93710
PHONE: (559) 294-7485 FAX: (559) 294-7481

PRINCE TRUCK STOP
NWC OF STATE ROUTE 99 & STATE ROUTE 166 (MARICOPA HWY)
BAKERSFIELD, CA 93313

REVISIONS

No.	Date	Description

Drawn: DWD
Checked: MAH
Approved: MIKE A. HAMZY

Project No: 09-208
Date: 06/16/2011

Title
ACC DETAILS

Sheet No.
A8.6

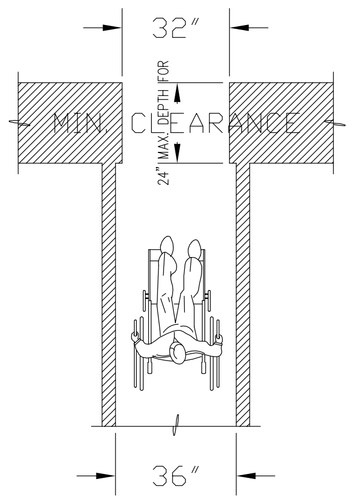

MINIMUM CLEAR WIDTH FOR SINGLE WHEELCHAIR
N.T.S.

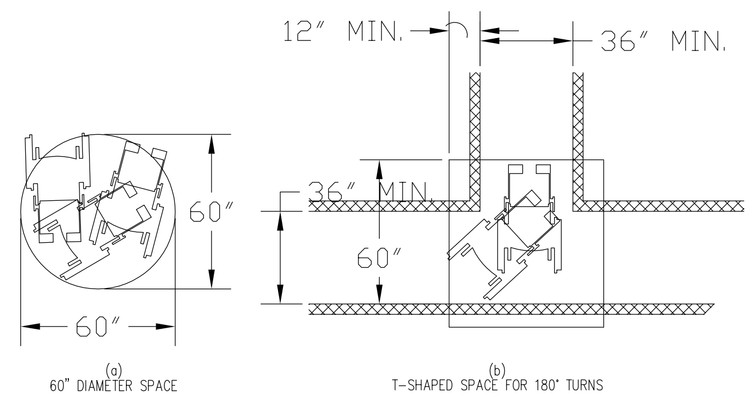

WHEELCHAIR TURNING SPACE
N.T.S.

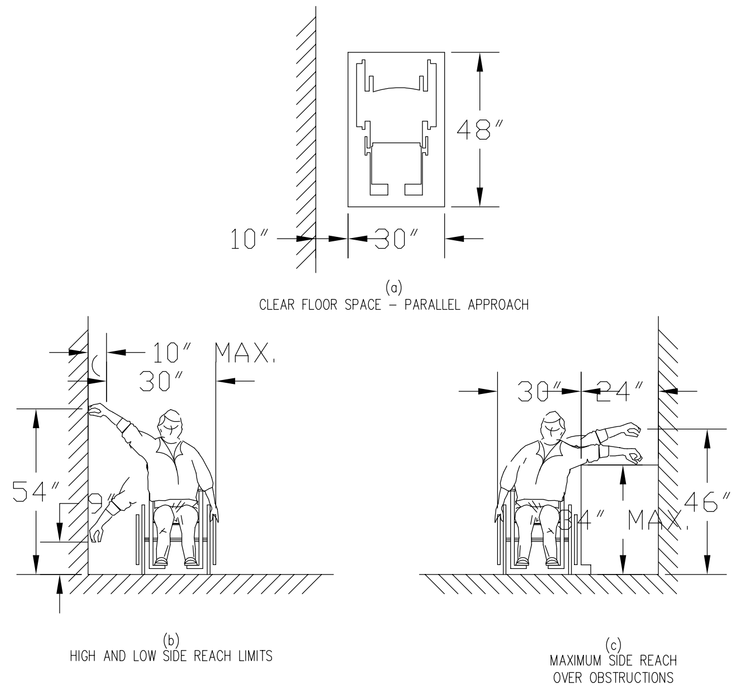

SIDE REACH
N.T.S.

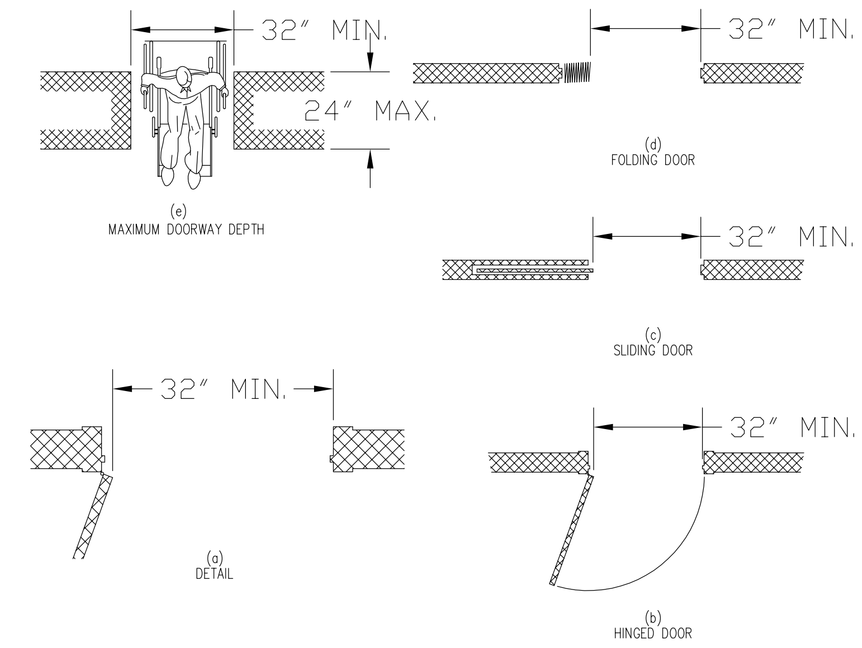

CLEAR DOORWAY WIDTH AND DEPTH
N.T.S.

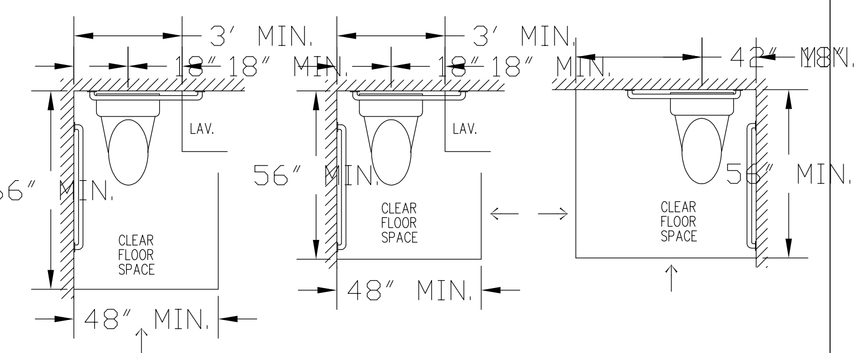

CLEAR FLOOR SPACE AT WATER CLOSETS
N.T.S.

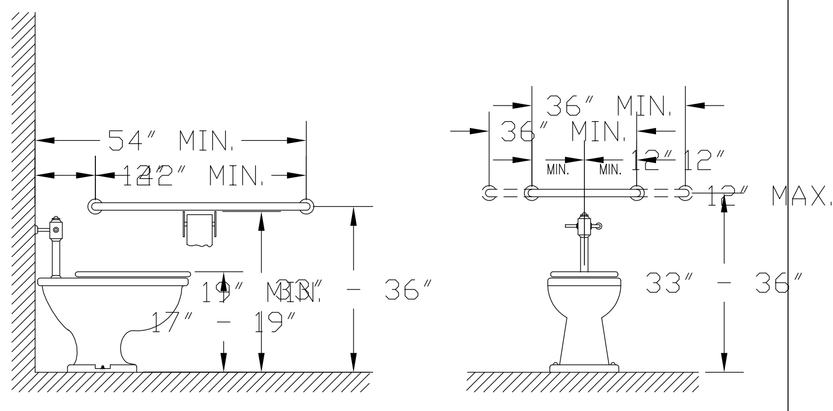

GRAB BARS AT WATER CLOSETS
N.T.S.

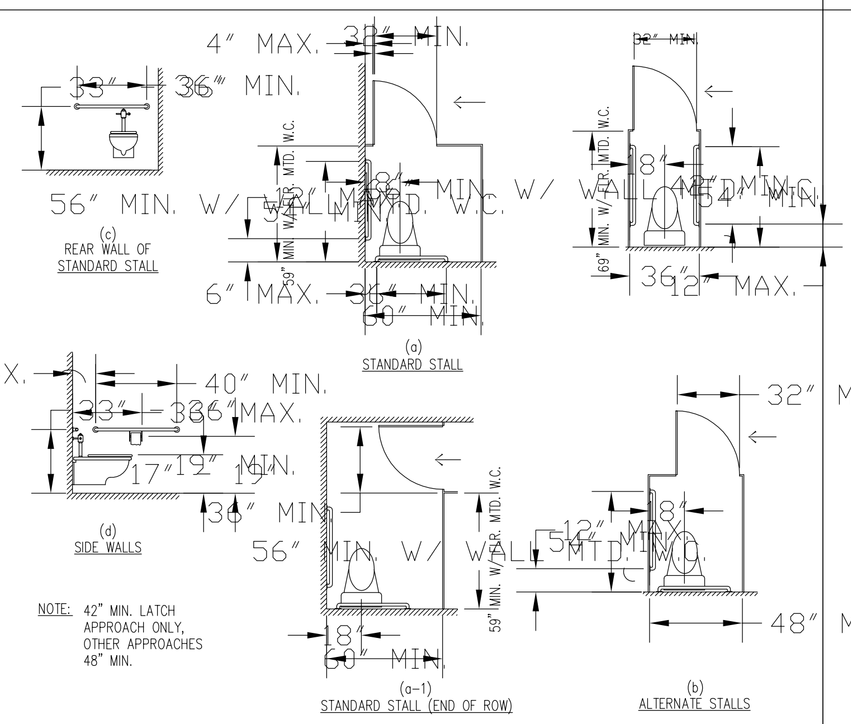

TOILET STALLS
N.T.S.

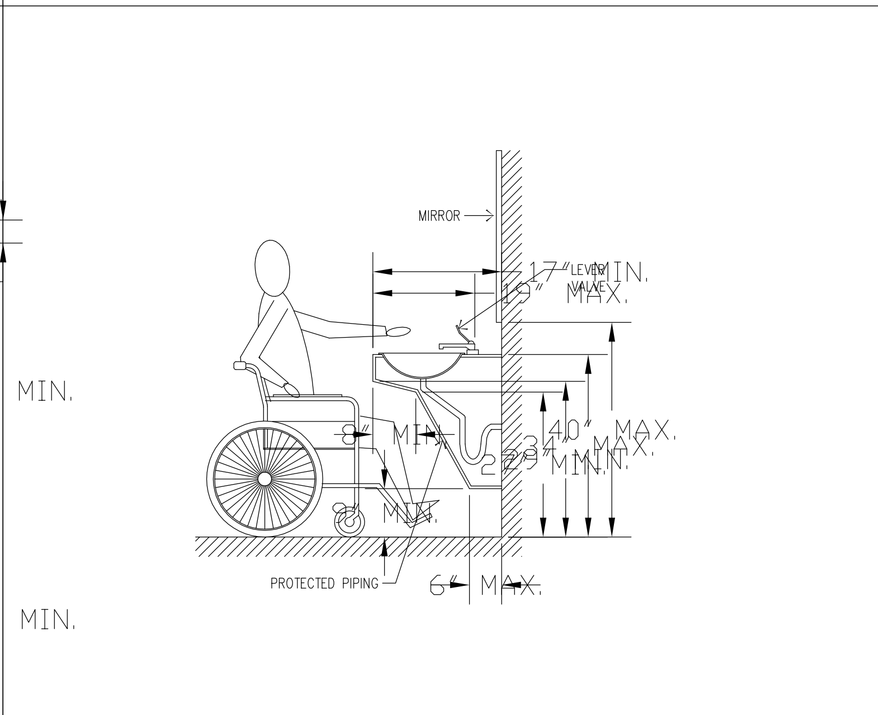

LAVATORY CLEARANCES
N.T.S.

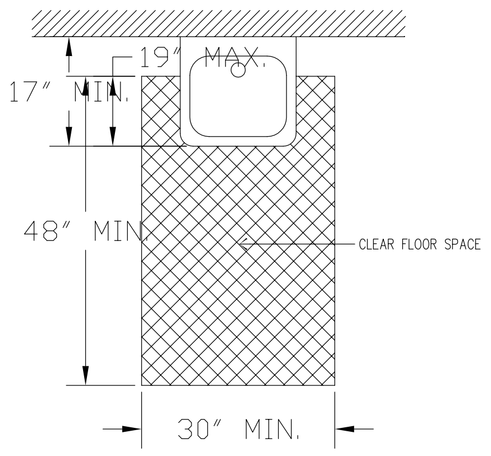

CLEAR FLOOR SPACE AT LAVATORIES
N.T.S.

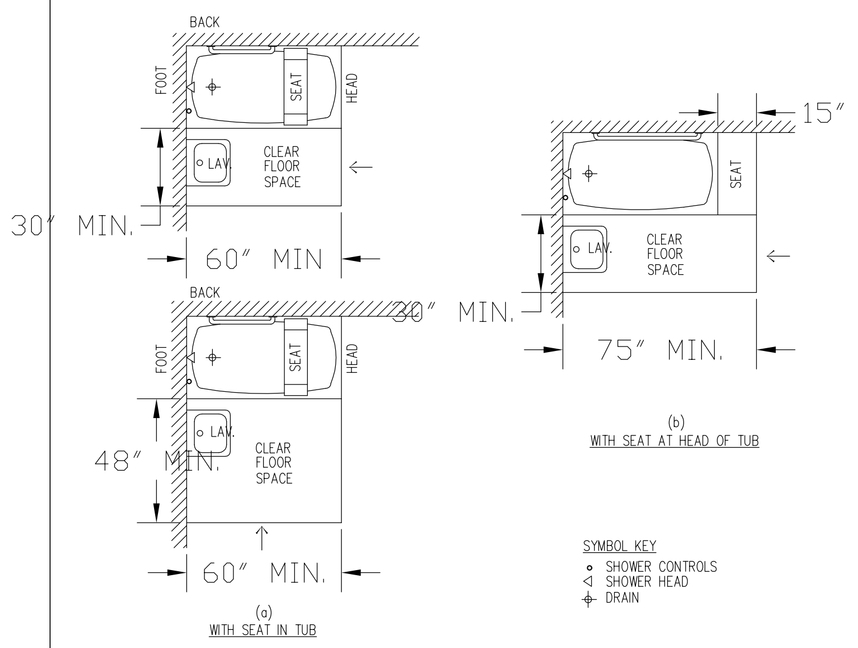

CLEAR FLOOR SPACE AT BATHTUBS
N.T.S.

STD. ACCESSIBILITY DETAILS

This and all other project documents and all ideas, aesthetics and designs incorporated therein are property of HARBISON INTERNATIONAL INC. and shall not be used in whole or in part for any project or purpose except as described in the contractual agreement between HI and the Client. HI (Harbison International) and consultants shall retain all common law, statutory and other reserved rights, including the copyright thereto. Reproduction of these documents without written permission is prohibited and any unauthorized use will be at the user's sole risk and without liability to HI and HI's consultants. Client agrees to fully indemnify and defend HI and HI's consultants, to the maximum legal extent against all losses, damages, claims or liabilities arising directly or indirectly from project document misuse. Project documents describe design intent of work, and are not a representation of the finished work. Contractor is solely responsible for all construction means, methods and techniques concerning the accuracy of documents and are not responsible for any discrepancies between project documents and the existing conditions.

HARBISON INTERNATIONAL INC.
ENGINEERS – SURVEYORS – PLANNERS
2755 E. SHAW AVE., SUITE 101, FRESNO, CA 93710
PHONE: (559) 294-7485 FAX: (559) 294-7481

REGISTERED PROFESSIONAL ENGINEER
MICHAEL H. WINN
No. 23273
Exp. 12-31-11
CIVIL
STATE OF CALIFORNIA

PRINCE TRUCK STOP
NWC OF STATE ROUTE 99 & STATE ROUTE 166 (MARICOPA HWY)
BAKERSFIELD, CA 93313

REVISIONS

No.	Date	Description

Drawn: DWD
Checked: MAH
Approved: MIKE A. HAMZY

Project No: 09-208
Date: 06/16/2011

Title
ACC DETAILS

Sheet No.
A8.7

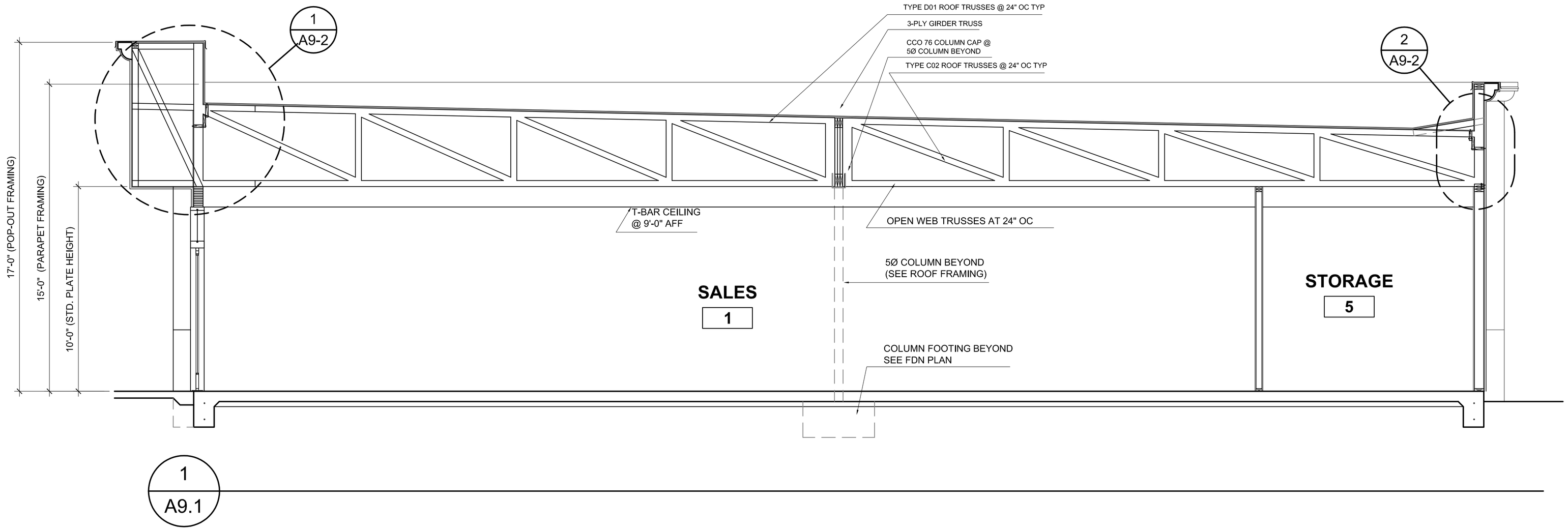

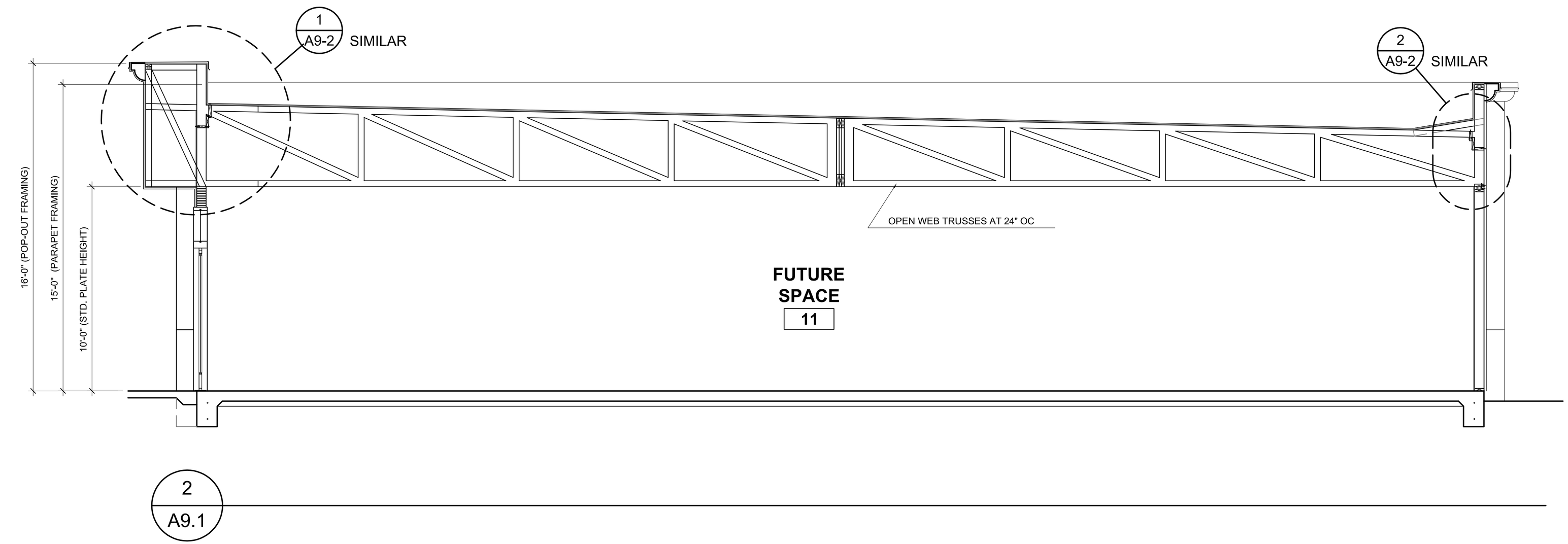

CROSS SECTIONS

This and all other project documents and all ideas, aesthetics and designs incorporated in them, as instruments of service, are and shall remain the property of Harbison International (HI) and cannot be lawfully used in whole or in part for any project or purpose except as described in the contractual agreement between HI and the Client. HI retains all common law, statutory and other reserved rights, including the copyright thereto. Client(and/or its sub only unlawful but also constitutes a fraud against HI's rights and will fully indemnify and defend HI and HI's consultants to the maximum legal extent against all losses, demands, claims or liabilities arising directly or indirectly from project document misuse.

Project documents describe design intent of work and are not a representation of the manner or means of construction. HI has no control over and is not responsible for any concerns concerning the accuracy of documents and are not responsible for any discrepancies between project documents and the existing conditions.

REGISTERED PROFESSIONAL ENGINEER
STATE OF CALIFORNIA
No. 23273
Exp. 12-31-11
CIVIL

HARBISON INTERNATIONAL INC.
ENGINEERS – SURVEYORS – PLANNERS
2755 E. SHAW AVE., SUITE 101, FRESNO, CA 93710
PHONE: (559) 294-7485 FAX: (559) 294-7481

PRINCE TRUCK STOP
NWC OF STATE ROUTE 99 &
STATE ROUTE 166 (MARICOPA HWY)
BAKERSFIELD, CA 93313

REVISIONS

No.	Date	Description

Drawn: DWD
Checked: MAH
Approved: MIKE A. HAMZY

Project No: 09-208
Date: 06/16/2011

Title
CROSS SECTIONS

Sheet No.
A9.1

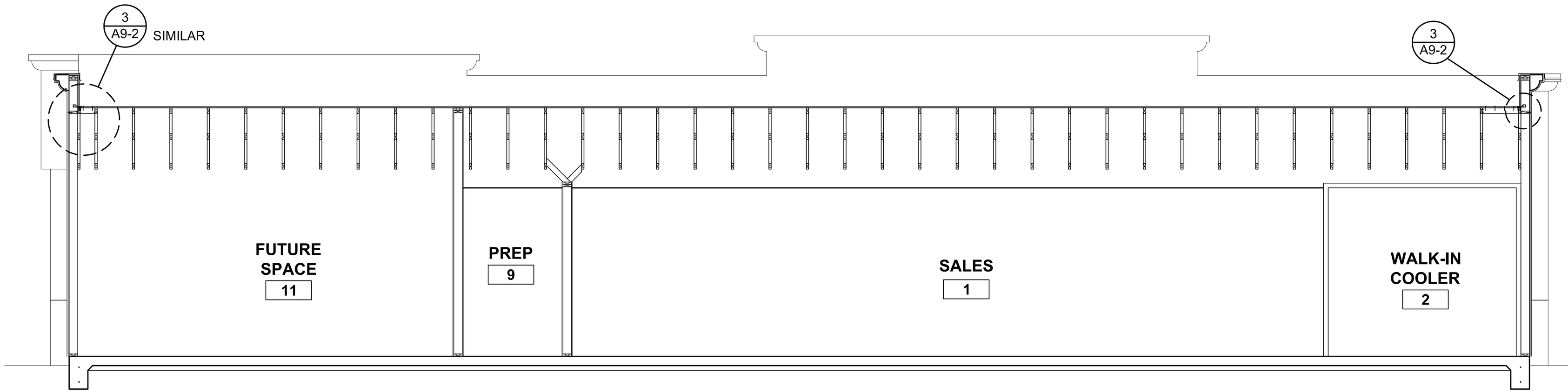

3 / A9.2 BULIDING CROSS SECTION

SCALE: 3/8" =1'-0"

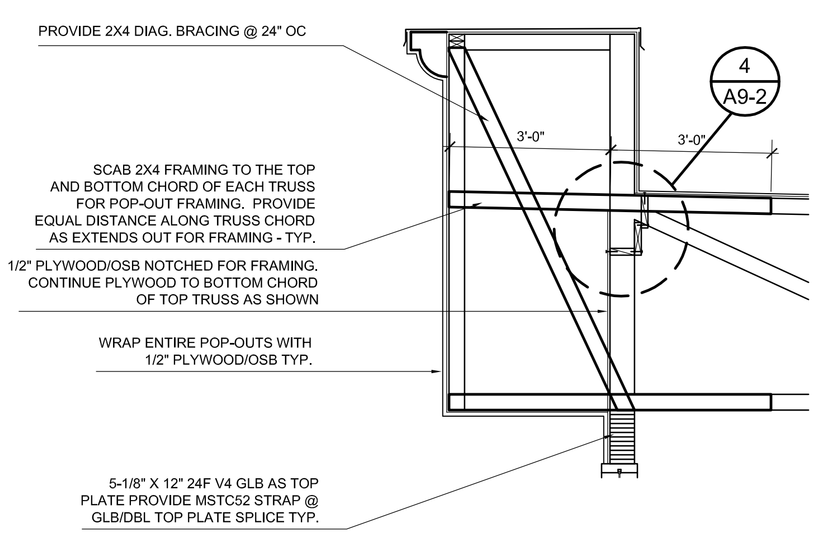

1 POP-OUT FRAMING DETAIL

SCALE: 1/2" =1'-0"

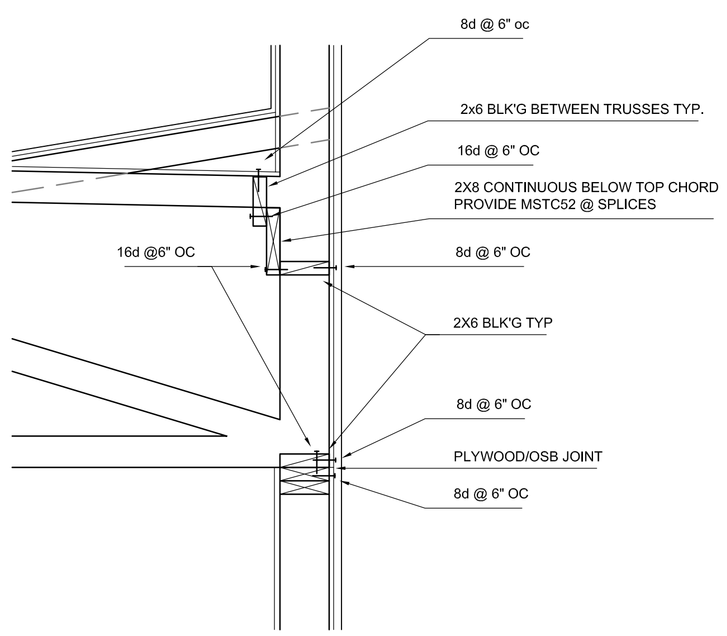

2 SHEAR TRANSFER DETAIL

SCALE: 1" =1'-0"

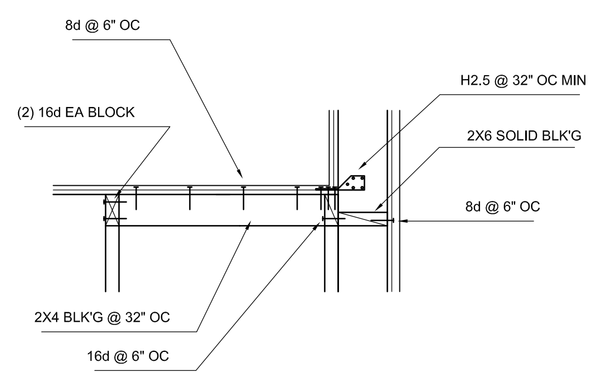

3 SHEAR TRANSFER DETAIL

SCALE: 1" =1'-0"

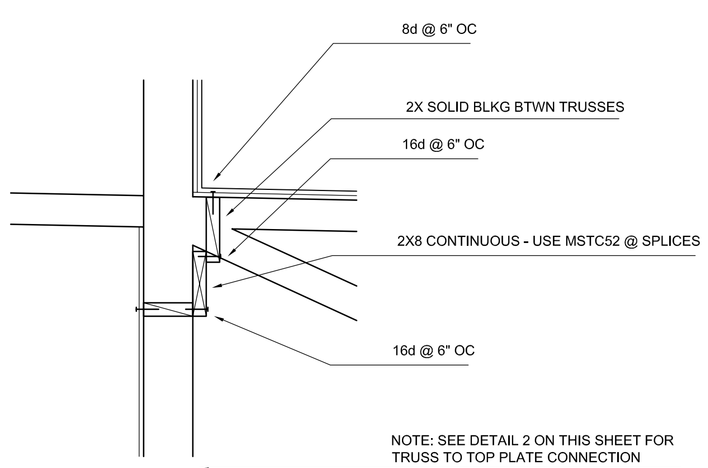

4 SHEAR TRANSFER DETAIL

SCALE: 1" =1'-0"

CROSS SECTIONS AND DETAILS

This and all other project documents and all ideas, aesthetics and designs incorporated therein are property of Harbison International (HI) and cannot be used in whole or in part for any project or purpose except as described in the contractual agreement between HI and the Client. HI retains all common law, statutory and other reserved rights, including the copyright thereto. Client (Owner) is not only grateful but also contractually bound to indemnify, protect and defend HI and HI's consultants to the maximum legal extent against all losses, demands, claims of liabilities arising directly or indirectly from project document misuse. Project documents describe design intent of work, and are not a representation of the manner of construction. Contractor is solely responsible for all construction means and methods concerning the accuracy of documents and are not responsible for any discrepancies between project documents and the existing conditions.

REGISTERED PROFESSIONAL ENGINEER
MICHAEL H WINN
No. 23273
Exp. 12-31-11
CIVIL
STATE OF CALIFORNIA

HARBISON INTERNATIONAL INC.
ENGINEERS – SURVEYORS – PLANNERS
2755 E. SHAW AVE., SUITE 101, FRESNO, CA 93710
PHONE: (559) 294-7485 FAX: (559) 294-7481

PRINCE TRUCK STOP
NWC OF STATE ROUTE 99 & STATE ROUTE 166 (MARICOPA HWY)
BAKERSFIELD, CA 93313

REVISIONS

No.	Date	Description

Drawn: DWD
Checked: MAH
Approved: MIKE A. HAMZY

Project No: 09-208
Date: 06/16/2011

Title: CROSS SECTIONS

Sheet No. A9.2

INDEX TO DRAWINGS

AA.0	COVER SHEET		
AA.1	SITE PLAN		
AA.2	SITE PLAN NOTES		
C-1	COVER/INDEX SHEET		
C-2	GRADING NOTES		
C-3	TOPOGRAPHY & BOUNDARY MAP		
C-4	GRADING AND DRAINAGE PLAN		
C-5	OVERALL SITE UTILITY PLAN		
C-6	ON-SITE LIGHT PLANS	A6.1	EXTERIOR ELEVATIONS
C-7	STORM WATER POLLUTION PREVENTION PLAN	A6.2	EXTERIOR ELEVATIONS
C-8	DETAIL SHEET	A8.1	STANDARD DETAILS
C-9	KERN COUNTY PLATES	A8.2	FOUNDATION DETAILS
L-1	LANDSCAPE PLANS	A8.3	FRAMING DETAILS
L-2	LANDSCAPE IRRIGATION PLANS	A8.4	FRAMING AND ROOF DETAILS
L-3	LANDSCAPE DETAIL SHEET	A8.5	STANDARD ACCESSIBILITY DETAILS
		A8.6	STANDARD ACCESSIBILITY DETAILS
		A8.7	STANDARD ACCESSIBILITY DETAILS
		A9.1	CROSS SECTIONS
		A9.2	CROSS SECTIONS AND DETAILS
A1.0	FOUNDATION PLAN		
A1.1	DIMENSIONED FLOOR PLAN	S1.0	SHEER WALL PLAN
A1.2	NOTED FLOOR PLAN		
		E1.0	ELECTRICAL PLAN
A1.4	REFLECTED CEILING PLAN	E1.1	LIGHTING PLAN
A2.1	ROOF FRAMING PLAN		
		M1.0	MECHANICAL PLAN
A3.1	ROOF PLAN		
SP1	SPECIFICATIONS	T24-1	ENERGY ANALYSIS REPORT
SP2	SPECIFICATIONS & NOTES	T24-2	ENERGY ANALYSIS REPORT
SP3	DOOR, FINISH & RESPONSIBILITY SCHEDULES	T24-3	ENERGY ANALYSIS REPORT
		T24-4	ENERGY ANALYSIS REPORT
		P1.0	PLUMBING PLAN
		P1.1	PLUMBING DETAILS

LEGAL DESCRIPTION

THAT PORTION OF THE NORTHWEST QUARTER OF SECTION 10, TOWNSHIP 11 NORTH, RANGE 20 WEST, SAN BERNARDINO MERIDIAN, IN THE UNINCORPORATED AREA OF THE COUNTY OF KERN, STATE OF CALIFORNIA, ACCORDING TO THE OFFICIAL PLAT THEREOF, BEING MORE PARTICULARLY
DESCRIBED AS FOLLOWS:

BEGINNING AT THE INTERSECTION OF THE CENTERLINE OF THE EXISTING STATE HIGHWAY 06-KER-166 AS NOW ESTABLISHED, WITH THE EAST LINE OF THE NORTHWEST QUARTER OF SAID SECTION 10, SAID INTERSECTION BEARS SOUTH 0°46'50" WEST 1142.54 FEET FROM THE NORTH QUARTER CORNER OF SAID SECTION; THENCE ALONG SAID CENTERLINE NORTH 89°39'40" WEST 965 FEET; THENCE AT RIGHT ANGLES NORTH 0°20'20" EAST, 50 FEET TO A POINT ON THE NORTH LINE OF SAID STATE HIGHWAY, SAID POINT ALSO BEING THE NORTHWEST CORNER OF PARCEL 2 OF DEED RECORDED JULY 16, 1965 IN BOOK 3858, PAGE 121 OF OFFICIAL RECORDS, AND THE TRUE POINT OF BEGINNING; THENCE NORTH 89°39'40" WEST ALONG SAID NORTH LINE, A DISTANCE OF 125 FEET; THENCE NORTH 0°20'20" EAST, 425 FEET; THENCE SOUTH 90°39'40" EAST, 300 FEET; THENCE SOUTH 0°20'20" WEST, A DISTANCE OF 425 FEET, MORE OR LESS, TO A POINT ON COURSE NO. 3 OF PARCEL 2, AS DESCRIBED IN THE DEED RECORDED JULY 16, 1965 IN BOOK 3858, PAGE 121 OF OFFICIAL RECORDS OF KERN COUNTY; THENCE ALONG SAID COURSE NO. 3 SOUTH 89°11'35" WEST 175 FEET TO THE TRUE POINT OF
BEGINNING.

EXCEPT ALL PETROLEUM AND OTHER OILS AND MINERALS AND ALL GAS WITHIN THE PROPERTY ABOVE DESCRIBED AS RESERVED BY KERN COUNTY LAND COMPANY, A CORPORATION, IN DEED RECORDED OCTOBER 23, 1945 IN BOOK 1283, PAGE 257 OF OFFICIAL RECORDS. BY QUITCLAIM DEED DATED MAY 15, 1967, RECORDED AUGUST 25, 1967, KERN COUNTY LAND COMPANY, A CALIFORNIA CORPORATION, QUITCLAIMED TO REYNOLD M. METTLER, A MARRIED MAN, SAID LAND EXCEPTING HOWEVER, AND EXPRESSLY RESERVING TO THE PARTY OF THE FIRST PART, ITS SUCCESSORS AND ASSIGNS, ALL PETROLEUM AND OTHER OILS AND MINERALS, AND ALL GAS WITHIN THE PROPERTY ABOVE DESCRIBED, AND THE RIGHT TO PROSPECT FOR, MINE AND REMOVE THE SAME, AND THE RIGHT TO DO ON AND IN THE PROPERTY ABOVE DESCRIBED WHATEVER MAY BE REASONABLE NECESSARY FOR THE FULL ENJOYMENT AND EXERCISE OF THE PROPERTY, AND RIGHT SO EXCEPTED AND RESERVED; BUT UNLESS THE PARTY OF THE SECOND PART, ITS SUCCESSORS AND ASSIGNS, SHALL GIVE WRITTEN CONSENT TO ENTRY UPON THE SURFACE OF THE PROPERTY ABOVE DESCRIBED, ALL OF THE FOREGOING RIGHTS EXCEPTED AND
RESERVED SHALL BE EXERCISED BY THE PARTY OF THE FIRST PART, ITS SUCCESSORS AND ASSIGNS, FROM LOCATIONS ON ADJACENT LANDS AND IN SUCH A MANNER AS NOT TO DISTURB THE SURFACE OF SAID PROPERTY OR ANY IMPROVEMENTS THEREUPON.

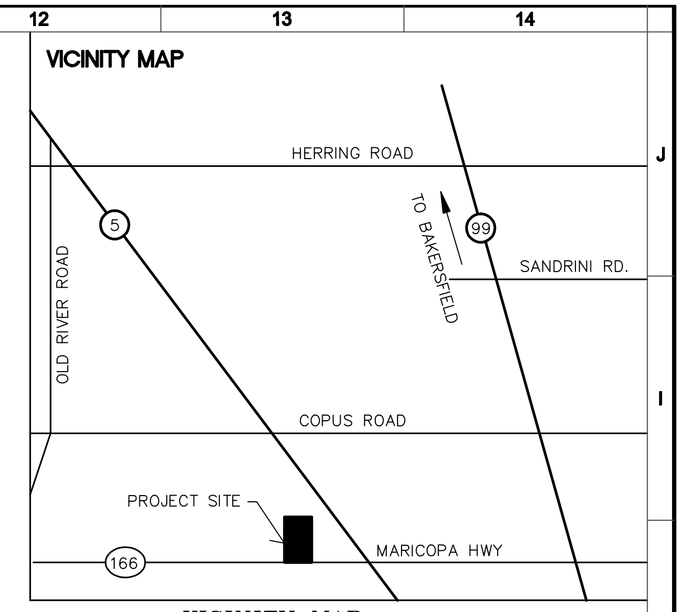

VICINITY MAP

N.T.S.

STATISTICAL INFORMATION

ONSITE DRAINAGE WILL BE HANDLED BY THE PROPOSED ON-SITE DRAINAGE BASIN

WATER WILL BE PROVIDED BY ONSITE WELL AND STORED IN ABOVE GROUND WATER STORAGE TANK

SEWAGE WILL BE DISPOSED OF BY SEPTIC SYSTEM.

PHASE I LANDSCAPE COVERAGE: 8.9% 6435 SF
PHASE II LANDSCAPE COVERAGE: 6.7%

SHEET INDEX

AA.0	COVER SHEET
AA.1	PRECISE DEVELOPMENT PLAN
AA.2	PRECISE PLAN NOTES

APN

APN: 238-203-07

ZONING

EXISTING: C-2 PD
PROPOSED: C-2 PD

PREPARED FOR:

MR. DALJINDER S. CHAUHAN
PRINCE PROPERTIES
2300 PANAMA LANE
BAKERSFIELD, CA. 93307

LAND USE

EXISTING: VACANT

PROPOSED: GAS STATION, TRUCK STOP, & MINI MART WITH FUTURE FAST FOOD RESTAURANT

LAND AREA

EXISTING:		127,194SF±	(2.92AC±)
PROPOSED:	PHASE I:	83,434SF±	(1.92AC±)
	PHASE II:	22,539SF±	(0.51AC±)
	PHASE III:	21,220SF±	(0.49AC±)

California Council of Civil Engineers & Land Surveyors

Construction contractor agrees that in accordance with generally accepted construction practices, construction contractor will be required to assume sole and complete responsibility for job site conditions during the course of construction of the project, including safety of all persons and property; that this requirement shall be made to apply continuously and not be limited to normal working hours, and construction further agrees to defend, indemnify and hold design professional harmless from any and all liability, real or alleged, in connection with the performance of work on this project, excepting liability arising from the sole negligence of design professional.

THE ENGINEER SHALL NOT BE RESPONSIBLE FOR DAMAGE CAUSED BY SUBSEQUENT CHANGES TO OR USES OF THESE PLANS, OR FOR DAMAGES CAUSED BY SUBSEQUENT CHANGES TO OR USES OF ANY SPECIFICATIONS, REPORTS, OR DOCUMENTS ASSOCIATED WITH THESE PLANS, INCLUDING CHANGES OR USES MADE BY STATE OR LOCAL AGENCIES; WHICH CHANGES OR USES ARE NOT SPECIFICALLY AUTHORIZED OR APPROVED, IN WRITING, BY THE ENGINEER.

This set of other project documents and all ideas, aesthetics and designs incorporated therein are instruments of service and shall remain the property of Harbison International (HI) and cannot be lawfully used in whole or in part for any project or purpose except as described in the contracted agreement between HI and the Client. HI hereby expressly reserves and retains its common law copyright and other property rights in these documents whether the project is executed or not. Any unauthorized use, reuse or modification (misuse) is not only unlawful but also automatically binds all parties involved with misuse to fully indemnify and defend HI and HI's consultants to the maximum legal extent against all losses, demands, claims or liabilities arising directly or indirectly from project document misuse.

Project documents are schematic design intent, and work and are not a representation of the finished product. Harbison International will not be responsible for any discrepancies concerning the accuracy of documents and are not responsible for any discrepancies between project documents and the existing conditions.

REGISTERED PROFESSIONAL ENGINEER — MICHAEL A. HARBISON — No. 23273 — Exp. 12-31-11 — CIVIL — STATE OF CALIFORNIA

HARBISON INTERNATIONAL INC.,
ENGINEERS - SURVEYORS - PLANNERS
2755 E. SHAW AVE., SUITE 101, FRESNO, CA 93710
PHONE: (559) 294-7485 FAX: (559) 294-7481

PRINCE TRUCK STOP

BAKERSFIELD, CALIFORNIA

REVISIONS
No. Date Desc.

Drawn: JMM
Checked: MAH
Approved: M. A. HAMZY

Project No.
Date: 6-21-11

Title
COVER SHEET

Sheet No.
AA.0

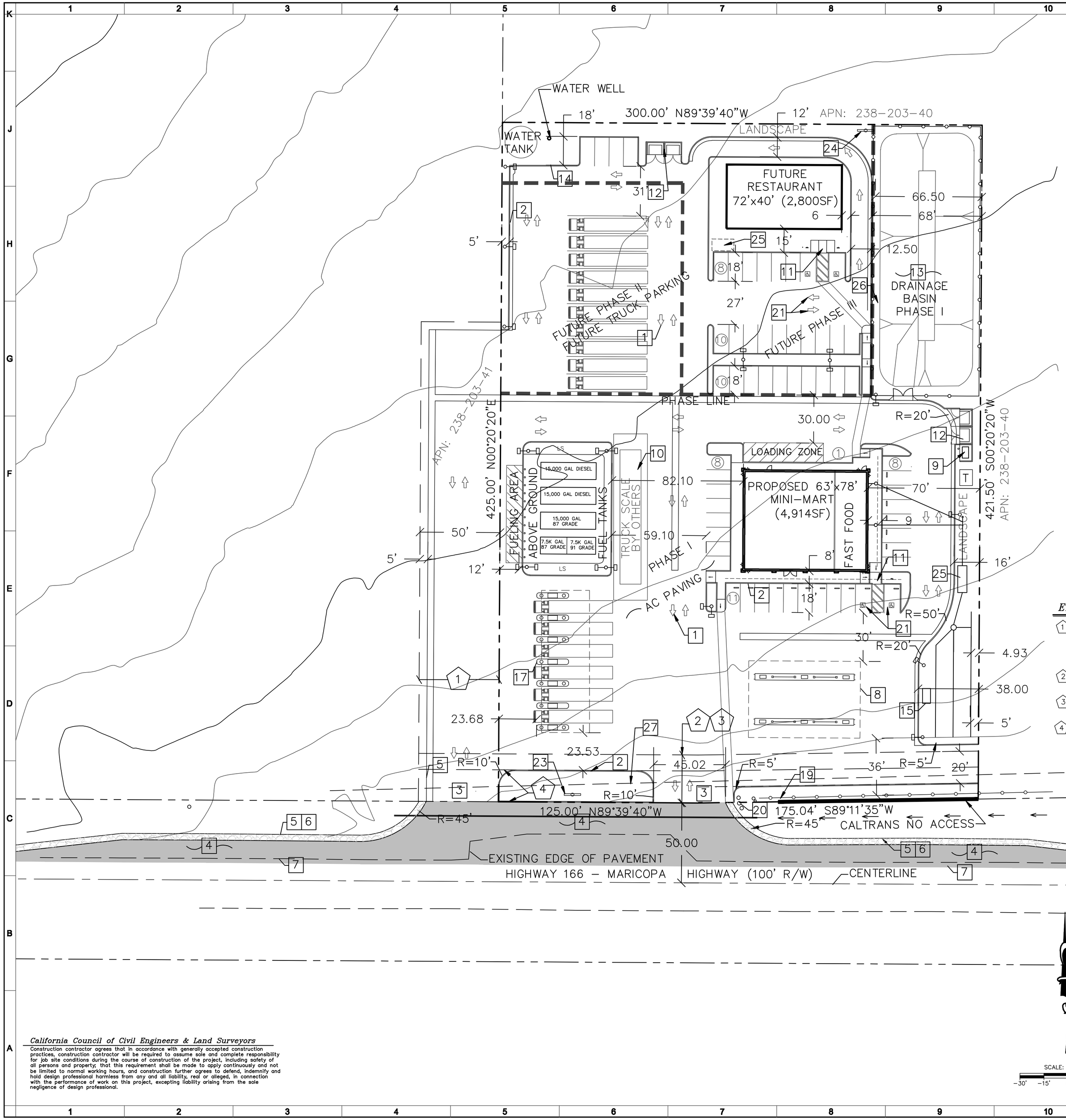

VICINITY MAP

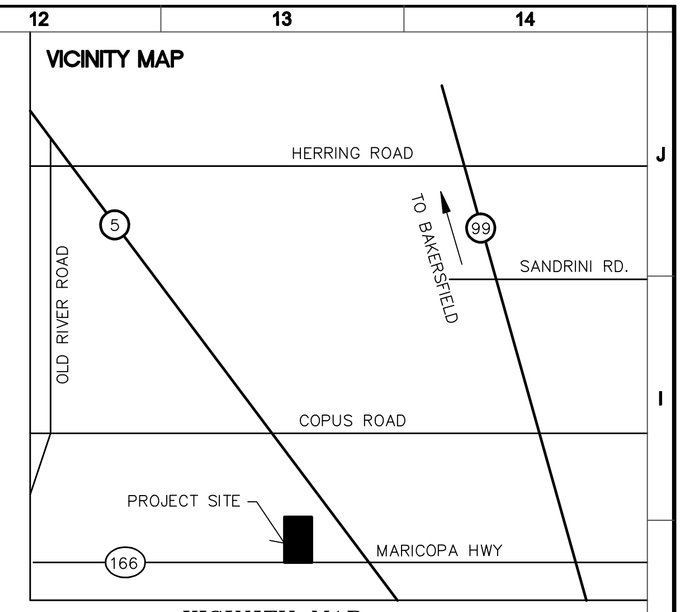

VICINITY MAP

N.T.S.

LEGEND

DI	DRAIN INLET	N 45 ° 53' 08" E	MEASURED BEARING AND DISTANCE
HCP	HANDICAP PARKING	VG	CONC. VALLEY GUTTER
PP	POWER POLE	PBMH	PACIFIC BELL MANHOLE
OH	OVER HEAD	———	PROP. LINE
SSMH	SANITARY SEWER MANHOLE	———	EASEMENT. LINE
W.M.	WATER METER	—10" SS—	EXISTING 10" SEWER MAIN
SD	STORM DRAIN	—WTR—	EXISTING WATER SERVICE
FDC	FIRE DEPT. CONNECTION	—SD—	EXISTING STORM DRAINAGE PIPE & SIZE
→	DIRECTION OF FLOW		STORM DRAIN INLET
(E)	EXISTING		STORM DRAIN MANHOLE
WV	WATER VALVE		SANITARY SEWER MANHOLE
T	TELEPHONE		WATER VALVE
			WATER METER
			FIRE HYDRANT
			TREE

CONSTRUCTION NOTES

1 PAINTED DIRECTIONAL ARROWS
2 NEW CURB PER COUNTY STD.
3 CONSTRUCT 45' WIDE CONCRETE DRIVE APPROACH PER COUNTY STD.
4 PROPOSED NEW PAVEMENT PER ENGINEERS IMPROVEMENT PLANS
5 PROPOSED EDGE OF PAVEMENT
6 CONSTRUCT NEW TRANSITION PAVEMENT PER COUNTY STD.
7 SAW-CUT EXISTING PAVEMENT
8 CONSTRUCT CONC. FUELING AREA WITH PUMPS. FUEL CANOPY BY OTHERS
9 CONSTRUCT ABOVE PROPANE FUEL TANKS – DESIGN BY OTHERS
10 CONSTRUCT TRUCK SCALE – DESIGN BY OTHERS
11 CONSTRUCT HANDICAP RAMP PER COUNTY STD.
12 CONSTRUCT TRASH ENCLOSURE PER COUNTY STD.
13 CONSTRUCT RETENTION POND
14 15,000 GAL. WATER STORAGE TANK FOR FIRE SUPRESSION PURPOSES
15 PROPOSED AIR / WATER PUMP
16 PROPOSED TRUCK STALLS
17 PROPOSED DIESEL TRUCK FUEL PUMPS
18 PROPOSED DIESEL FUEL UNDERGROUND TANKS
19 EXISTING 4' HIGH FENCE TO BE REMOVED
20 EXISTING POWER POLE, GUARD POSTS, AND RISER TO REMAIN. DO NOT DAMAGE DURING CONSTRUCTION.
21 VAN ACCESSIBLE PARKING STALL FOR HANDICAP USE W/ RAMP AND APPROVED H/C SIGNAGE
22 20'-0" HIGH POLE MOUNTED MERCURY VAPOR SHIELDED DOWN LIGHTS
23 PROPOSED STREET MONUMENT SIGN NOT NOT EXCEED 20' IN HEIGHT. SIZE 6'x4'.
24 PROPOSED HIGHWAY SIGN. MAXIMUM HEIGHT 35'. SIZE AND DETAIL PER SEPARATE SUBMITTAL
25 PROPOSED SCEPTIC TANK
26 PROPOSED 6' HIGH CHAIN LINK FENCE
27 EXISTING 15" PRESSURIZED CONCRETE ASBESTOS PIPELINE TO REMAIN

EXISTING EASEMENTS

1. EXISTING 50' WIDE CROSS ACCESS, CROSS DRAINAGE EASEMENT PER DOC. 0210016583 KERN COUNTY RECORDS AS REQUESTED BY CALTRANS AND OBTAINED FROM ADJACENT PROPERTY OWNER
2. 30' WIDE FUTURE CALTRANS R/W AND CROSS ASSESS EASEMENT FOR INGRESS AND EGRESS OF ADJACENT PROPERTY
3. EXISTING 30' WIDE CROSS ASSESS EASEMENT FOR INGRESS AND EGRESS OF ADJACENT PROPERTY
4. EXISTING 20' WIDE WATER MAIN EASEMENT GRANTED TO WHEELER RIDGE-MARICOPA WATER STORAGE DISTRICT, RECORDED IN BOOK 4528 PG. 350 RECORDED ON MAY 14, 1971, K.C.O.R.

BUILDING COVERAGE

PHASE 1: 6.7%
PHASE 2: 0%
PHASE 3: 9.1%

PARKING

PHASE 1 PARKING
HANDICAP STALLS: 2
STANDARD STALLS: 25
TOTAL: 27

CAR PUMP PARKING: 12
TRUCK PUMP PARKING: 6

PHASE 2 PARKING
TRUCK STALLS: 13

PHASE 3 PARKING
HANDICAP STALLS: 2
STANDARD STALLS: 27
TOTAL: 29

FUEL PUMPS

TRUCK DIESEL PUMPS: 6
AUTOMOBILE PUMPS: 6 (TOTAL OF 12 VEHICLES SIMULTANEOUSLY FUELING)

PREPARED FOR:

MR. DALJINDER S. CHAUHAN
PRINCE PROPERTIES
2300 PANAMA LANE
BAKERSFIELD, CA. 93307

California Council of Civil Engineers & Land Surveyors

Construction contractor agrees that in accordance with generally accepted construction practices, construction contractor will be required to assume sole and complete responsibility for job site conditions during the course of construction of the project, including safety of all persons and property; that this requirement shall be made to apply continuously and not be limited to normal working hours, and construction further agrees to defend, indemnify and hold design professional harmless from any and all liability, real or alleged, in connection with the performance of work on this project, excepting liability arising from the sole negligence of design professional.

THE ENGINEER SHALL NOT BE RESPONSIBLE FOR DAMAGE CAUSED BY SUBSEQUENT CHANGES TO OR USES OF THESE PLANS, OR FOR DAMAGES CAUSED BY SUBSEQUENT CHANGES TO OR USES OF ANY SPECIFICATIONS, REPORTS, OR DOCUMENTS ASSOCIATED WITH THESE PLANS, INCLUDING CHANGES OR USES MADE BY STATE OR LOCAL AGENCIES; WHICH CHANGES OR USES ARE NOT SPECIFICALLY AUTHORIZED OR APPROVED, IN WRITING, BY THE ENGINEER.

This and all other project documents and all ideas, aesthetics and designs incorporated herein are instruments of service and shall remain the property of the Harbison International (HI) and cannot be lawfully used in whole or in part for any project or purpose except as described in the contracted agreement between HI and the Client. HI hereby reserves and retains all rights to common law, statutory and other reserved rights, including copyright. Use of any unlawful but also automatically binds all parties involved with misuse to fully indemnify and defend HI and HI's consultants to the maximum legal extent against all losses, damages, claims or liabilities arising directly or indirectly from project document misuse.

Project documents include design intent, and work and are not a representation of the as-built conditions. Harbison International shall not be responsible for any discrepancies concerning the accuracy of documents and are not responsible for any discrepancies between project documents and the existing conditions.

REGISTERED PROFESSIONAL ENGINEER — JAMES H. WINN — No. 23273 — Exp. 12-31-11 — CIVIL — STATE OF CALIFORNIA

HARBISON INTERNATIONAL INC.,
ENGINEERS - SURVEYORS - PLANNERS
2755 E. SHAW AVE., SUITE 101, FRESNO, CA 93710
PHONE: (559) 294-7485 FAX: (559) 294-7481

PRINCE TRUCK STOP

BAKERSFIELD, CALIFORNIA

REVISIONS
No. Date Desc.

Drawn: JMM
Checked: MAH
Approved: M. A. HAMZY

Project No.
Date: 6-21-11

Title
SITE PLAN

Sheet No.
AA.1

PRIOR TO THE ISSUANCE OF BUILDING OR GRADING PERMITS OR THE COMMENCEMENT OF OPERATIONS, WHICHEVER OCCURS FIRST, THE APPLICANT SHALL SUBMIT THE FOLLOWING INFORMATION:

1. THE DEVELOPMENT SHALL COMPLY WITH ALL LOCAL, STATE, AND FEDERAL LAWS REGARDING THE PROPOSED ABOVEGROUND PETROLEUM STORAGE.

2. PRIOR TO THE ISSUANCE OF BUILDING OR GRADING PERMITS, THE APPLICANT SHALL SUBMIT DOCUMENTATION OF THE FOLLOWING:

3. THE METHOD OF WATER SUPPLY AND SEWAGE DISPOSAL SHALL BE AS REQUIRED AND APPROVED BY THE KERN COUNTY PUBLIC HEALTH SERVICES DEPARTMENT/ENVIRONMENTAL HEALTH DIVISION.

4. FIRE FLOWS, FIRE PROTECTION FACILITIES, AND ACCESS WAYS SHALL BE AS REQUIRED AND APPROVED BY THE KERN COUNTY FIRE DEPARTMENT.

5. A PLAN FOR THE DISPOSAL OF DRAINAGE WATERS ORIGINATING ON-SITE AND FROM ADJACENT ROAD RIGHTS-OF-WAY SHALL BE APPROVED BY THE KERN COUNTY ENGINEERING, SURVEYING, AND PERMIT SERVICES DEPARTMENT/ FLOODPLAIN MANAGEMENT, IF REQUIRED. EASEMENTS OR GRANT DEEDS SHALL BE GIVEN TO THE COUNTY OF KERN FOR DRAINAGE PURPOSES OR ACCESS THERETO, AS NECESSARY.

6. PRIOR TO SUBMITTAL OF THE DRAINAGE PLAN TO THE COUNTY, THE PLAN SHALL BE REVIEWED AND APPROVED BY THE RESPONSIBLE MOSQUITO ABATEMENT DISTRICT.

7. A COMPREHENSIVE LANDSCAPING AND MAINTENANCE IRRIGATION PLAN SHALL BE APPROVED BY THE DIRECTOR OF THE KERN COUNTY PLANNING AND COMMUNITY DEVELOPMENT DEPARTMENT IN ACCORDANCE WITH THE REQUIREMENTS OF CHAPTER 19.86 OF THE ZONING ORDINANCE. A MINIMUM OF FIVE PERCENT OF THE TOTAL DEVELOPED AREA SHALL BE LANDSCAPED AND CONTINUOUSLY MAINTAINED IN GOOD CONDITION. LANDSCAPING SHALL BE INSTALLED OR BONDED FOR PRIOR TO OCCUPANCY OF THE BUILDING OR SITE. MINIMUM TREE SIZE SHALL BE 15 GALLON. MINIMUM SHRUB SIZE SHALL BE FIVE GALLON, AND MINIMUM SIZE FOR SMALL SHRUBS AND GROUNDCOVER SHALL BE ONE GALLON. THE LANDSCAPE PLAN SHALL LIST THE LOCATION, SIZE (IN GALLONS), AND TYPE OF PLANT AND TREE MATERIAL TO BE USED THROUGHOUT THE SITE. THE CONCEPTUAL LANDSCAPE PLAN SUBMITTED WITH THE APPROVED PRECISE DEVELOPMENT PLAN MAY SERVE AS THE BASIS FOR FULFILLING THIS REQUIREMENT; HOWEVER, THE CONCEPTUAL LANDSCAPE PLAN NOTES WILL NEED TO BE REVISED TO REFLECT: (A) THE CORRECT JURISDICTIONAL AUTHORITY; AND (B) COMPLIANCE WITH THE REQUIREMENTS OF CHAPTER 19.86 (LANDSCAPING) OF THE KERN COUNTY ZONING ORDINANCE. COMPLIANCE WITH THIS CONDITION WILL ALSO REQUIRE THE SUBMITTAL OF A FEE OF $50 IN CONJUNCTION WITH THE FILING OF THE REQUISITE LANDSCAPING AND MAINTENANCE IRRIGATION PLAN FOR ITS REVIEW AND APPROVAL.

8. THE APPLICANT SHALL CONSULT WITH THE ENVIRONMENTAL HEALTH DIVISION AND PROVIDE TO THE CURRENT PERCOLATION RATE(S) FOUND OF SOILS FOUND AT THE SITE. SHOULD IT BE DETERMINED THAT THE PROJECT HAS PERCOLATION RATES OF LESS THAN FIVE MINUTES PER INCH, A REVISED SOILS STUDY SHALL BE PROVIDED TO THE EHD FOR REVIEW AND COMMENT. THE REVISED SOILS STUDY SHALL INCLUDE SITE SPECIFIC DOCUMENTATION THAT CHARACTERIZES THE QUALITY OF UPPER GROUNDWATER IN THE PROJECT VICINITY AND AN EVALUATION OF THE EXTENT TO WHICH, IF ANY, THE PROPOSED USE OF ALTERNATIVE SEPTIC SYSTEMS WILL ADVERSELY IMPACT GROUNDWATER QUALITY. IF THE EVALUATION INDICATES THAT THE UPPERMOST GROUNDWATER AT THE PROJECT SITE EXCEEDS GROUNDWATER QUALITY OBJECTIVES OF THE REGIONAL WATER QUALITY CONTROL BOARD OR WOULD IF THE ALTERNATIVE SEPTIC SYSTEM WERE INSTALLED, THE APPLICANT SHALL BE REQUIRED TO SUPPLY SEWAGE COLLECTION, TREATMENT AND DISPOSAL FACILITIES.

9. THE APPLICANT SHALL OBTAIN PERMITS FOR THE INSTALLATION OF ALL ABOVE GROUND OR UNDERGROUND STORAGE TANKS FROM THE ENVIRONMENTAL HEALTH DIVISION'S HAZARDOUS MATERIALS PROGRAM.

10. PLANS FOR ANY PROPOSED TREATMENT UNITS SHALL BE SUBMITTED TO THE CALIFORNIA REGIONAL WATER QUALITY CONTROL BOARD (BOARD) FOR REVIEW AND APPROVAL. IN ADDITION, THE WASTE DISCHARGE REQUIREMENTS (WDR'S) AS ESTABLISHED BY THE BOARD SHALL BE SUBMITTED TO THE ENVIRONMENTAL HEALTH DIVISION. SHOULD IT BE DETERMINED THAT WDR'S ARE NOT NEEDED, THE APPLICANT SHALL SUBMIT AN ENGINEER DESIGNED SEPTIC SYSTEM TO THE ENVIRONMENTAL HEALTH DIVISION FOR REVIEW AND APPROVAL.

11. A MINIMUM OF 5 PERCENT OF THE INTERIOR PARKING AREA SHALL BE LANDSCAPED, WITH TREES PLANTED AT A RATIO OF ONE TREE PER SIX PARKING SPACES PLACED AT A MAXIMUM OF 65-FOOT INTERVALS. PARKING AREA LANDSCAPING SHALL BE IN ACCORDANCE WITH SECTION 19.82.090 OF THE ZONING ORDINANCE AND MAY BE USED IN THE CALCULATION OF TOTAL LANDSCAPING REQUIREMENTS. LANDSCAPING SHALL BE INSTALLED OR BONDED FOR PRIOR TO OCCUPANCY OF THE BUILDING OR SITE.

12. THE OWNER/OPERATORS OF PERMITTED USES THAT INVOLVE EQUIPMENT OR ACTIVITIES THAT STORE, USE, OR GENERATE HYDROCARBONS, PARTICULATE MATTER, TOXIC CHEMICALS, NUISANCE ODORS, OR OTHER AIR CONTAMINANTS SUBJECT TO AIR POLLUTION CONTROL REQUIREMENTS, SHALL CONSULT WITH, AND BE SUBJECT TO THE REQUIREMENTS OF, THE APPLICABLE AIR POLLUTION CONTROL DISTRICT. IF REQUESTED BY THE APPLICABLE AIR POLLUTION CONTROL DISTRICT, THE BUILDING OFFICIAL MAY WITHHOLD FINAL INSPECTION OR ISSUANCE OF A CERTIFICATE OF COMPLIANCE FOR ANY STRUCTURE ON PROPERTY CONTAINING A BUSINESS WHICH IS IN NONCOMPLIANCE WITH THE REQUIREMENTS OF THAT DISTRICT UNTIL SUCH TIME AS THE DEFICIENCIES ARE CORRECTED.

13. THE APPLICANT SHALL CONSULT WITH THE ENVIRONMENTAL HEALTH DIVISION IN ORDER TO DETERMINE WHETHER OR NOT A WATER SUPPLY PERMIT WILL BE REQUIRED FROM THE DEPARTMENT IF HEALTH SERVICES/DRINKING WATER BRANCH IS REQUIRED

14. SHOULD ANY FUTURE FACILITY INTENDS TO SELL TOBACCO PRODUCTS SHALL OBTAIN A TOBACCO RETAILER'S PERMIT FROM THE ENVIRONMENTAL HEALTH DIVISION.

15. PRIOR TO THE ISSUANCE OF BUILDING PERMITS FOR ANY FOOD FACILITY AUTHORIZED AS PART OF THIS PRECISE DEVELOPMENT PLAN, THE DEVELOPER SHALL COMPLY THE FOLLOWING:

16. THE APPLICANT SHALL OBTAIN ALL PERMITS NECESSARY FROM THE KERN COUNTY ENVIRONMENTAL HEALTH DIVISION'S FOOD PROGRAM FOR PLAN CHECK AND APPROVAL.

17. PRIOR TO FINAL OCCUPANCY APPROVAL, THE FOLLOWING CONDITIONS SHALL BE VERIFIED BY THE BUILDING INSPECTOR AND SHALL BE CONTINUOUSLY MAINTAINED WHILE THIS PERMIT IS ACTIVE:

18. ANY BUSINESS WHICH STORES HAZARDOUS OR TOXIC CHEMICALS AS A NORMAL PART OF ITS BUSINESS SHALL FILE A BUSINESS PLAN WITH THE KERN COUNTY PUBLIC HEALTH SERVICES DEPARTMENT/ENVIRONMENTAL HEALTH DIVISION.

19. ALL EASEMENTS SHALL BE KEPT OPEN, CLEAR, AND FREE FROM BUILDINGS AND STRUCTURES OF ANY KIND PURSUANT TO CHAPTERS 18.50 AND 18.55 OF THE KERN COUNTY LAND DIVISION ORDINANCE. ALL OBSTRUCTIONS, INCLUDING UTILITY POLES AND LINES, TREES, POLE SIGNS, OR SIMILAR OBSTRUCTIONS, SHALL BE REMOVED FROM THE ULTIMATE ROAD RIGHTS-OF-WAY IN ACCORDANCE WITH SECTION 18.55.030 OF THE LAND DIVISION ORDINANCE. COMPLIANCE WITH THIS REQUIREMENT IS THE RESPONSIBILITY OF THE APPLICANT AND MAY RESULT IN SIGNIFICANT FINANCIAL EXPENDITURES.

20. ALL STORAGE AND PRESSURE TANKS SHALL BE PAINTED AN EARTHEN HUE COLOR.

21. THE SUMP SITE SHALL BE WHOLLY ENCLOSED WITHIN A SIX-FOOT-HIGH CHAIN LINK FENCE CONSTRUCTED WITH SOLID SCREENING SLATS.

22. PARKING SHALL BE PROVIDED AS ILLUSTRATED ON THE APPROVED PLAN. HANDICAP ACCESSIBLE PARKING SPACES SHALL BE PROVIDED IN ACCORDANCE WITH THE REQUIREMENTS OF TITLE 24 OF THE CALIFORNIA ADMINISTRATIVE CODE. SHOULD THE PROJECT BE BUILT IN PHASES, PARKING MAY BE PHASED AND PROVIDED IN A MANNER AS SHOWN ON THE APPROVED PLAN. NO ON-SITE TRUCK PARKING SHALL BE ALLOWED OUTSIDE THE FUEL ISLANDS UNTIL PHASE II HAS BEEN COMPLETED.

23. ALL ACCESS DRIVES, PARKING AREAS, AND VEHICLE MANEUVERING AREAS SHALL BE SURFACED WITH A MINIMUM OF TWO (2) INCHES OF ASPHALTIC CONCRETE PAVING CONSTRUCTED OVER A MINIMUM OF THREE INCHES OF COMPACTED BASE MATERIAL OR MATERIAL OF HIGHER QUALITY. WHERE THE PROJECT SITE DOES NOT HAVE DIRECT ACCESS TO A COUNTY-MAINTAINED ROAD, A PAVED ACCESS DRIVE SHALL CONNECT TO THE CLOSEST COUNTY-MAINTAINED ROAD, AND A PAVED TIE-IN SHALL BE PROVIDED UNDER ENCROACHMENT PERMIT FROM THE KERN COUNTY ROADS DEPARTMENT. THE PAVED ACCESS DRIVE SHALL BE CONTINUOUSLY MAINTAINED IN GOOD CONDITION.

24. VEHICLE PARKING SPACES SHALL BE 9 FEET BY 20 FEET OR LARGER IN SIZE AND SHALL BE DESIGNATED BY WHITE PAINTED STRIPES, EXCEPT AS PROVIDED IN SECTIONS 19.82.030 AND 19.82.040 OF THE ZONING ORDINANCE.

25. CONCRETE WHEEL BLOCKS OR A SIX-INCH RAISED A.C. CURB SHALL BE INSTALLED AT EACH PARKING SPACE THAT ABUTS A STRUCTURE OR PROPERTY LINE.

26. THE APPLICANT SHALL SUBMIT AND OBTAIN APPROVAL OF A VECTOR CONTROL PLAN FROM THE KERN COUNTY PUBLIC HEALTH SERVICES DEPARTMENT/ENVIRONMENTAL HEALTH DIVISION/SOLID WASTE PROGRAM.

27. ALL SIGNS SHALL BE APPROVED BY THE DIRECTOR OF THE KERN COUNTY PLANNING AND COMMUNITY DEVELOPMENT DEPARTMENT PRIOR TO INSTALLATION.

28. ALL TRASH AND RECYCLABLE BIN RECEPTACLES SHALL BE ENCLOSED WITHIN A SIX- (6-) FOOT-HIGH, THREE-SIDED MASONRY ENCLOSURE WITH SECURABLE IRON GATE AND SHALL BE INSTALLED ON AN IMPERVIOUS SURFACE AT A LOCATION THAT IS OUTSIDE THE REQUIRED FRONT YARD AND CONVENIENT FOR REFUSE HAULERS AND WHICH DOES NOT INTERFERE WITH ON- OR OFF-SITE PARKING OR CIRCULATION. FOR ALL COMMERCIAL AND INDUSTRIAL USES WITH FIVE (5) OR MORE EMPLOYEES, ADEQUATE SPACE SHALL BE PROVIDED FOR THE COLLECTION AND LOADING OF RECYCLABLE MATERIALS. THE LOCATION FOR ALL TRASH AND RECYCLING BIN ENCLOSURES SHALL BE APPROVED BY THE DIRECTOR OF THE KERN COUNTY PLANNING AND COMMUNITY DEVELOPMENT DEPARTMENT PRIOR TO CONSTRUCTION.

29. AREAS AND CONTAINERS SHALL BE PROVIDED FOR THE COLLECTION OF RECYCLABLE MATERIALS CONSISTING OF PLASTIC AND ALUMINUM BEVERAGE CONTAINERS FOR THE BENEFIT OF EMPLOYEES AND CUSTOMERS. THE COLLECTION SITE MAY BE INCLUDED IN THE REQUIRED SOLID WASTE DISPOSAL AREA(S) OR IN A SEPARATE AREA MEETING THE ENCLOSURE REQUIREMENTS OF SECTION 19.80.030.K OF THE KERN COUNTY ZONING ORDINANCE. THE COLLECTION AREA(S) SHALL BE MAINTAINED IN GOOD CONDITION, AND RECYCLABLE MATERIALS STORED THEREIN SHALL BE COLLECTED REGULARLY WITH A FREQUENCY THAT ENSURES THAT THE COLLECTION SITE DOES NOT BECOME A VISUAL NUISANCE AND DOES NOT RESULT IN THE CREATION OF HEALTH, SAFETY, OR VECTOR PROBLEMS.

30. FROM THE DROP POINT OF ANY OVERHEAD POWER POLE ON THE PERIPHERY OF THE SITE, ALL NEW ON-SITE UTILITY SERVICES SHALL BE PLACED UNDERGROUND.

31. FOR PERMITTED USES THAT INCLUDE THE PLACEMENT OF ANY SOLID OR LIQUID MATERIAL DIRECTLY ON THE GROUND WHICH HAS THE POTENTIAL TO LEACH INTO THE GROUND AND ADVERSELY IMPACT GROUNDWATER, THE APPLICANT SHALL CONSULT WITH, AND BE SUBJECT TO REVIEW AND APPROVAL BY, THE CALIFORNIA REGIONAL WATER QUALITY CONTROL BOARD OR, ALTERNATIVELY, THE KERN COUNTY PUBLIC HEALTH SERVICES DEPARTMENT/ENVIRONMENTAL HEALTH DIVISION.

32. DEDICATION AND IMPROVEMENT OF ONSITE PROJECT FRONTAGE ALONG MARICOPA HIGHWAY (STATE ROUTE 166) SHALL BE AS REQUIRED BY THE CALIFORNIA DEPARTMENT OF TRANSPORTATION UNDER APPROVALS AND\OR PERMITS ISSUED BY THAT AGENCY.

33. THE PROPERTY OWNER SHALL CONTINUOUSLY COMPLY WITH THE FOLLOWING CONDITIONS OF APPROVAL DURING IMPLEMENTATION OF THIS PERMIT:

34. THE DEVELOPMENT SHALL COMPLY WITH ANY REQUIREMENTS OF THE SAN JOAQUIN VALLEY AIR POLLUTION CONTROL DISTRICT.

35. IF ANY PREVIOUSLY UNKNOWN OIL, GAS OR INJECTION WELLS ARE DISCOVERED, WORK IN THE AREA OF DISCOVERY SHALL BE STOPPED AND THE DEPARTMENT OF CONSERVATION/DIVISION OF OIL, GAS, AND GEOTHERMAL RESOURCES/BAKERSFIELD OFFICE CONTACTED BY THE PROJECT PROPONENT TO OBTAIN INFORMATION ON THE REQUIREMENTS OF, AND APPROVAL TO PERFORM, REMEDIAL OPERATIONS IMPLEMENTED PRIOR TO RESUMPTION OF WORK IN THE AREA OF DISCOVERY.

36. THE SUMP SITE SHALL BE MAINTAINED FREE OF DEBRIS AND WEEDS AT ALL TIMES.

37 ALL EXTERIOR LIGHTING SHALL BE DIRECTED AWAY FROM ADJACENT PROPERTIES AND ROADS. WHEN LIGHTING WILL BE VISIBLE FROM A RESIDENTIAL DISTRICT OR ADJACENT PUBLIC ROADS, THE LIGHTING FIXTURES SHALL BE EQUIPPED WITH GLARE SHIELDS OR BAFFLES AND SHALL NOT EXCEED 40 FEET IN HEIGHT ABOVE GRADE. LIGHT FIXTURES SHALL BE MAINTAINED IN SOUND OPERATING CONDITIONS AT ALL TIMES.

38. TRASH PICKUP SHALL OCCUR A MINIMUM OF ONCE EACH WEEK. ALL TRASH AND RECYCLABLE RECEPTACLES SHALL BE ENCLOSED WITHIN A SIX- (6-) FOOT-HIGH, THREE-SIDED MASONRY ENCLOSURE WITH SECURABLE IRON GATE AND SHALL BE INSTALLED ON AN IMPERVIOUS SURFACE AT A LOCATION THAT IS OUTSIDE THE REQUIRED FRONT-YARD SETBACK AND CONVENIENT FOR REFUSE HAULERS AND WHICH DOES NOT INTERFERE WITH ON-SITE OR OFF-SITE PARKING OR CIRCULATION. FOR ALL COMMERCIAL AND INDUSTRIAL USES WITH FIVE (5) OR MORE EMPLOYEES, ADEQUATE SPACE SHALL BE PROVIDED FOR THE COLLECTION AND LOADING OF RECYCLABLE MATERIALS.

39. ROOF-MOUNTED MECHANICAL, REFRIGERATION OR HEATING EQUIPMENT SHALL BE CONCEALED BY FULL OR PARTIAL ENCLOSURES THAT EMPLOY THE SAME BUILDING MATERIALS AS USED IN THE FACADE AND/OR ROOF DESIGN SO THAT THE EQUIPMENT IS NOT VISIBLE FROM ANY OFF-SITE LOCATION. WHEN LOCATED ON THE GROUND ADJACENT TO A BUILDING, MECHANICAL, REFRIGERATION OR HEATING EQUIPMENT SHALL BE SCREENED BY LANDSCAPING, SOLID MASONRY WALL OR SOLID FENCING, OR COMBINATION THEREOF, FROM ABUTTING PUBLIC STREETS AND ALL ADJACENT PROPERTIES DEVELOPED WITH RESIDENTIAL OR COMMERCIAL USES.

40. SHOULD A CONFLICT OCCUR BETWEEN THE STATISTICAL DATA SHOWN ON THE PLAN AND THE CONDITIONS OF APPROVAL, THE CONDITIONS OF APPROVAL SHALL PREVAIL.

41. ALL USED OIL (AS DEFINED IN SECTION 25250.1 OF THE CALIFORNIA HEALTH AND SAFETY CODE) SHALL BE DISPOSED OF IN ACCORDANCE WITH ALL LOCAL, STATE, AND FEDERAL REGULATIONS FOLLOWING CONSULTATION WITH THE KERN COUNTY PUBLIC HEALTH SERVICES DEPARTMENT/ENVIRONMENTAL HEALTH DIVISION/HAZARDOUS MATERIALS SECTION, STATE OF CALIFORNIA DEPARTMENT OF HEALTH SERVICES, AND THE ENVIRONMENTAL PROTECTION AGENCY. ALL USED OIL AND OTHER WASTES SHALL BE TRANSPORTED BY A REGISTERED WASTE HAULER.

42. WHEN ACCESSORY TO A PERMITTED USE, THE STORAGE OF FLAMMABLE AND COMBUSTIBLE LIQUIDS NOT OTHERWISE REGULATED BY THIS TITLE SHALL BE SUBJECT TO THE FOLLOWING:

43. THE MAXIMUM QUANTITY OF FLAMMABLE OR COMBUSTIBLE LIQUIDS STORED IN ABOVE-GROUND TANKS ASSOCIATED WITH ANY PARTICULAR BUSINESS SHALL BE 12,000 GALLONS PER TANK AND AN AGGREGATE MAXIMUM OF 48,000 GALLONS, UNLESS THE KERN COUNTY FIRE MARSHAL APPROVES A DEVIATION TO ALLOW ADDITIONAL STORAGE CAPACITY.

44. ABOVE-GROUND STORAGE STRUCTURES DESIGNED FOR THE STORAGE OF 6,000 GALLONS OR LESS OF ANY FLAMMABLE OR COMBUSTIBLE LIQUID SHALL BE SETBACK A MINIMUM DISTANCE OF 15 FEET FROM ANY PROPERTY LINE AND FROM ANY DWELLING UNIT, EXCEPT WHERE THE CALIFORNIA FIRE CODE OR THE KERN COUNTY FIRE MARSHAL SPECIFICALLY AUTHORIZES A DEVIATION FROM THIS SETBACK REQUIREMENT. ABOVE-GROUND STORAGE STRUCTURES DESIGNED FOR THE STORAGE OF MORE THAN 6,000 GALLONS OF ANY FLAMMABLE OR COMBUSTIBLE LIQUID SHALL BE SETBACK A MINIMUM DISTANCE OF 25 FEET FROM ANY PROPERTY LINE AND FROM ANY DWELLING UNIT, EXCEPT WHERE THE CALIFORNIA FIRE CODE OR THE KERN COUNTY FIRE MARSHAL SPECIFICALLY AUTHORIZES A DEVIATION FROM THIS SETBACK REQUIREMENT.

45. ALL ABOVE-GROUND STORAGE SHALL BE WITHIN TYPES OF CONTAINERS APPROVED FOR THAT USE BY THE KERN COUNTY FIRE MARSHAL.

46. IN INSTANCES WHERE THE KERN COUNTY FIRE MARSHAL APPROVES DEVIATIONS FROM THE REQUIREMENTS OF THIS SECTION, CONDITIONS MAY BE IMPOSED THAT ARE DEEMED NECESSARY BY THE KERN COUNTY FIRE MARSHAL TO SAFEGUARD PUBLIC HEALTH AND SAFETY. ANY SUCH DEVIATION SHALL BE AUTHORIZED IN WRITING.

47. IF ANY PREVIOUSLY UNKNOWN ARCHAEOLOGICAL OR CULTURAL RESOURCES ARE DISCOVERED, WORK IN THE AREA OF DISCOVERY SHALL BE STOPPED AND A QUALIFIED ARCHAEOLOGIST CONTACTED TO EVALUATE THE FIND. A COPY OF THE ARCHAEOLOGIST'S EVALUATION SHALL BE SUBMITTED TO THE KERN COUNTY PLANNING AND COMMUNITY DEVELOPMENT DEPARTMENT UPON ITS ISSUANCE AND ANY MEASURES RECOMMENDED BY THE ARCHAEOLOGIST SHALL BE IMPLEMENTED PRIOR TO RESUMPTION OF WORK IN THE AREA OF DISCOVERY

California Council of Civil Engineers & Land Surveyors

Construction contractor agrees that in accordance with generally accepted construction practices, construction contractor will be required to assume sole and complete responsibility for job site conditions during the course of construction of the project, including safety of all persons and property; that this requirement shall be made to apply continuously and not be limited to normal working hours, and construction contractor further agrees to defend, indemnify and hold design professional harmless from any and all liability, real or alleged, in connection with the performance of work on this project, excepting liability arising from the sole negligence of design professional.

THE ENGINEER SHALL NOT BE RESPONSIBLE FOR DAMAGE CAUSED BY SUBSEQUENT CHANGES TO OR USES OF THESE PLANS, OR FOR DAMAGES CAUSED BY SUBSEQUENT CHANGES TO OR USES OF ANY SPECIFICATIONS, REPORTS, OR DOCUMENTS ASSOCIATED WITH THESE PLANS, INCLUDING CHANGES OR USES MADE BY STATE OR LOCAL AGENCIES; WHICH CHANGES OR USES ARE NOT SPECIFICALLY AUTHORIZED OR APPROVED, IN WRITING, BY THE ENGINEER.

This and all other project documents and all ideas, aesthetics and designs incorporated therein are instruments of service. All project documents are the registered property of Harbison International (HI) and cannot be lawfully used in whole or in part for any project or purpose except as described in the contractual agreement between HI and the Client. HI hereby gives formal notice that any such project document use, reproduction, or modification (misuse) is not only unlawful but also automatically binds all parties involved with misuse to fully indemnify and defend HI and HI's consultants to the maximum legal extent against all losses, demands, claims or liabilities arising directly or indirectly from project document misuse.

Project documents describe design intent of work and are not a representation of the as-built or existing conditions. HI and HI's consultants make no representations concerning the accuracy of documents and are not responsible for any discrepancies between project documents and the existing conditions.

REGISTERED PROFESSIONAL ENGINEER — DALE H WINN — No. 23273 — Exp. 12-31-11 — CIVIL — STATE OF CALIFORNIA

HARBISON INTERNATIONAL INC.,
ENGINEERS – SURVEYORS – PLANNERS
2755 E. SHAW AVE., SUITE 101, FRESNO, CA 93710
PHONE: (559) 294-7485 FAX: (559) 294-7481

PRINCE TRUCK STOP

BAKERSFIELD, CALIFORNIA

REVISIONS		
No.	Date	Desc.

Drawn: JMM
Checked: MAH
Approved: M. A. HAMZY

Project No.
Date: 6-21-11

Title: SITE NOTES

Sheet No. AA.2

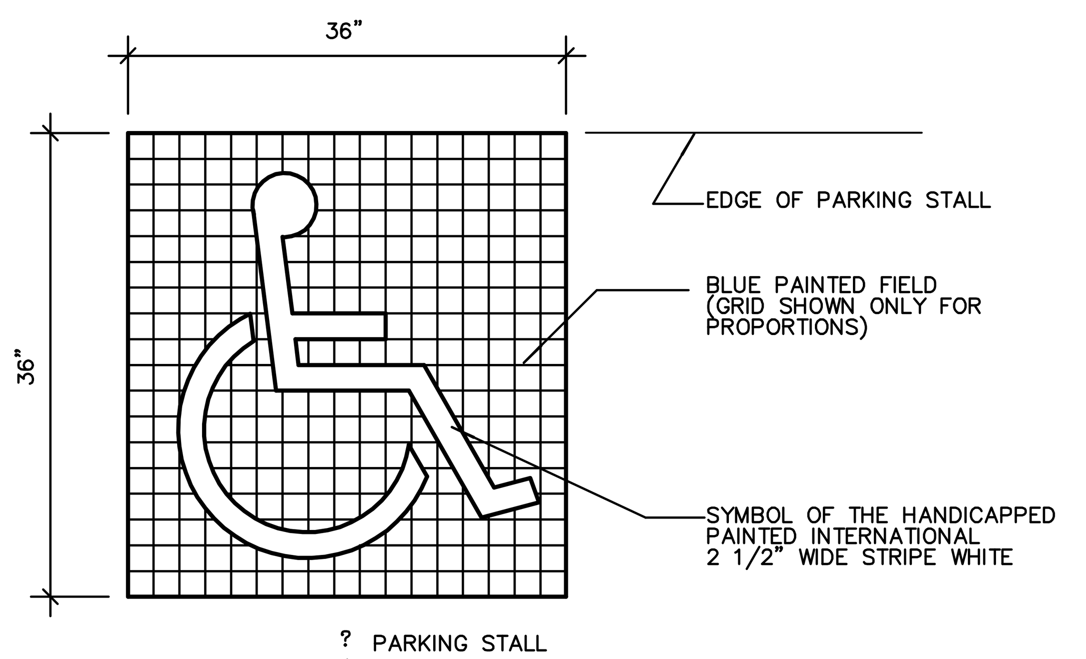

1 HANDICAP SYMBOL

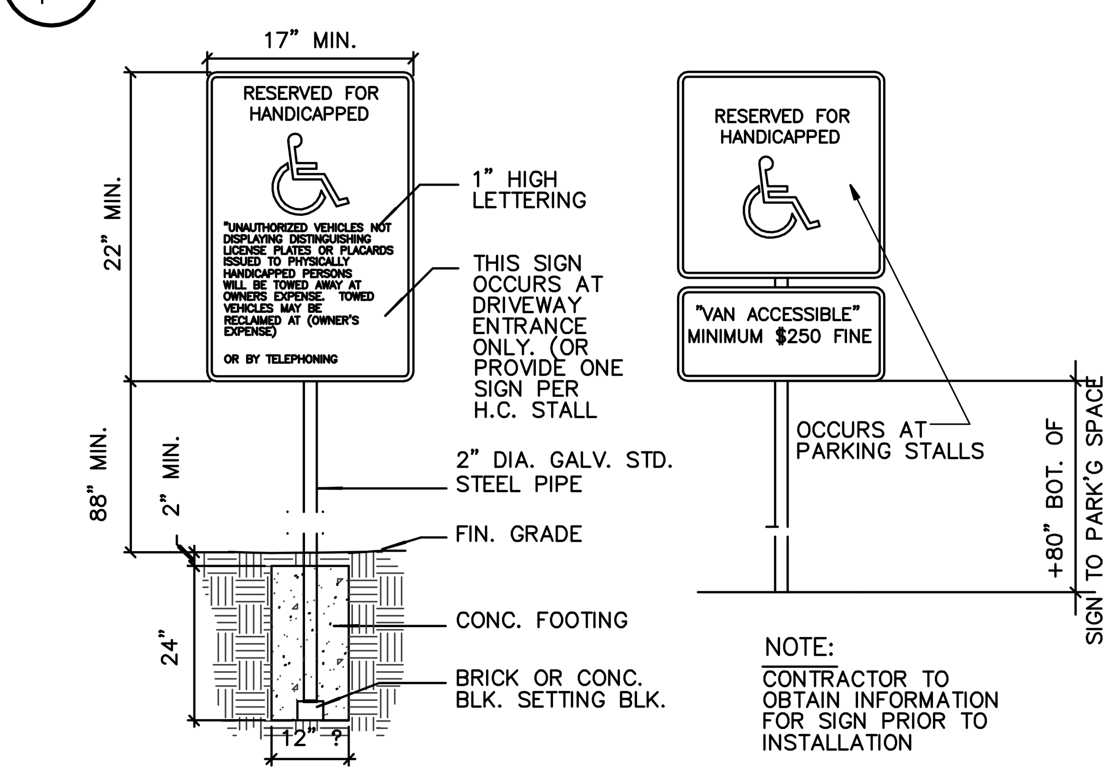

2 HANDICAPPED SIGN

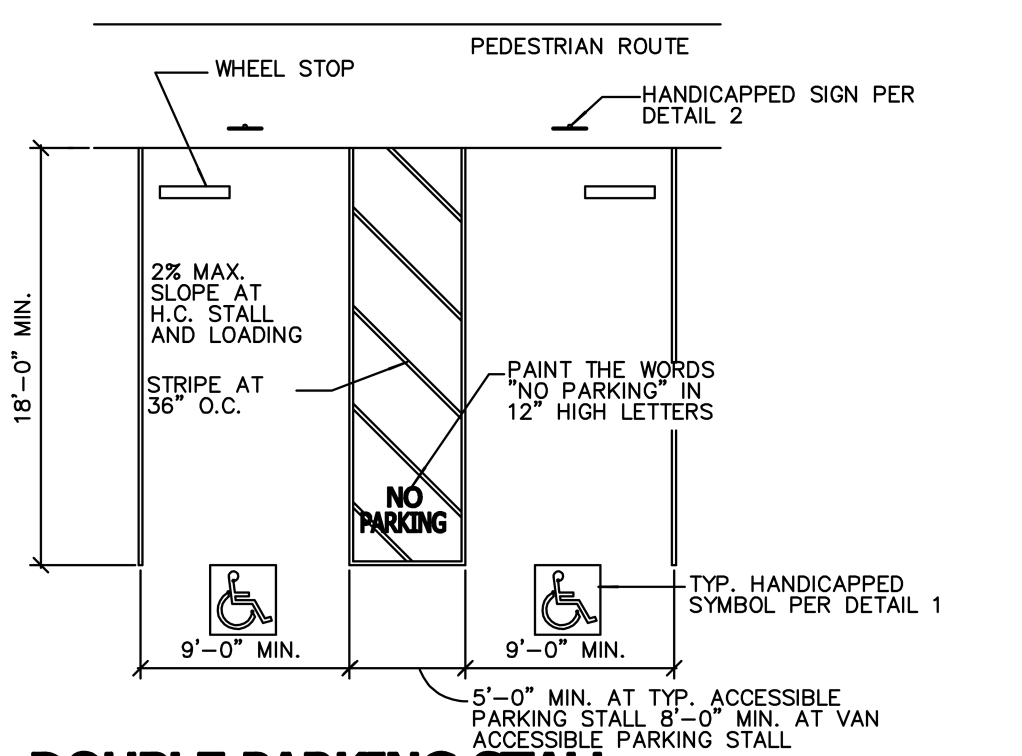

3 DOUBLE PARKING STALL

NOTE: MIN. ONE IN EVERY EIGHT ACCESSIBLE STALLS TO BE VAN ACCESSIBLE BUT NOT LESS THAN ONE

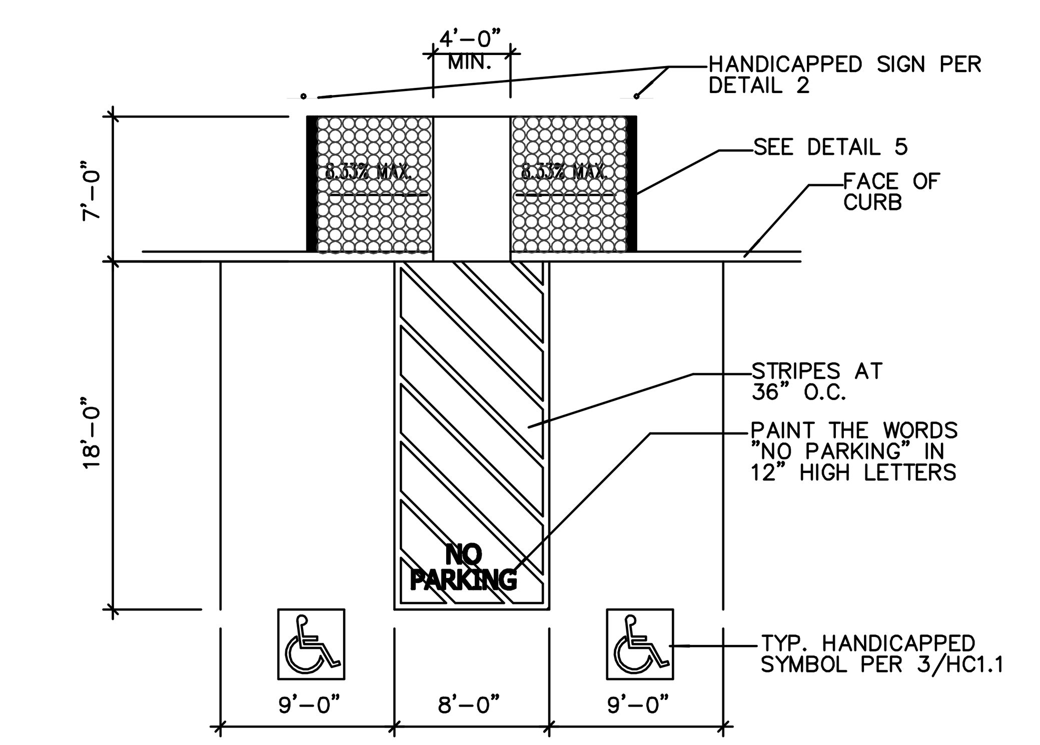

4 HANDICAPPED PARKING STALLS

NOTE: MIN. ONE IN EVERY EIGHT ACCESSIBLE STALLS TO BE VAN ACCESSIBLE BUT NOT LESS THAN ONE

THE FOLLOWING GENERAL NOTES SHOULD BE INCLUDED ON SUBDIVISION STREET IMPROVEMENT PLANS:

1. CONSTRUCTION SPEED LIMITS WILL BE POSTED AT TEN MILES PER HOUR (10 MPH). VERIFICATION OF COMPLIANCE SHALL BE THE RESPONSIBILITY OF THE KERN COUNTY ENGINEERING AND SURVEY SERVICES DEPARTMENT / BUILDING INSPECTION DIVISION.

2. IMPROVEMENTS SHALL BE IN ACCORDANCE WITH STATE OF CALIFORNIA BUSINESS AND TRANSPORTATION AGENCY DEPARTMENT OF TRANSPORTATION STANDARD SPECIFICATIONS, CURRENT ADDITION, AS MODIFIED AND DETERMINED APPLICABLE BY THE DIRECTOR.

3. ALL STREETS HAVE BEEN DESIGNED IN ACCORDANCE WITH THE TRAFFIC INDEX AS SHOWN ON THE TYPICAL CROSS-SECTIONS.

4. ALL STREETS HAVE BEEN DESIGNED USING A MINIMUM "R" VALUE AS SHOWN ON TYPICAL CROSS-SECTIONS. SHOULD FURTHER TESTING SHOW A LOWER "R" VALUE OF THE ACTUAL IN PLACE MATERIAL, STREETS SHALL BE REDESIGNED ACCORDING TO THE LOWER "R" VALUE.

5. ANY LAYER OF "R" VALUE MATERIAL SPECIFIED IN THE TYPICAL CROSS-SECTION MAY BE INCREASED IN DEPTH PROVIDED THAT THE MATERIAL ABOVE THAT LAYER HAS NO LESS THAN THE MINIMUM THICKNESS SHOWN.

6. IF APPROVED IN WRITING BY THE DIRECTOR, AN ALTERNATE PAVEMENT DESIGN USING CLASS III AGGREGATE BASE AND A THICKER A.C. SECTION MAY BE USED.

7. ANY WORK WHICH AFFECTS ANY EXISTING COUNTY MAINTAINED ROAD OR THE TRAFFIC THEREON SHALL BE COMPLETED WITHIN 20 WORKING DAYS FROM START OF WORK.

8. ELEVATIONS AND GRADES SHOWN ON THE PROFILES ARE GUTTER FLOWLINES (INVERTS).

9. MAXIMUM PLUS GRADE TOLERANCE FOR A.B., A.S.B/ AND O.G. SHALL BE 0.05 OF A FOOT.

10. PORTLAND CEMENT CONCRETE SHALL BE CLASS B UNLESS OTHERWISE INDICATED.

11. PERMANENT TRAFFIC CONTROL SIGNING AND OTHER SAFETY DEVICES (NOT SHOWN ON THESE PLANS) SHALL BE INSTALLED TO PLAN APPROVED BY THE KERN COUNTY ENGINEER.

12. STREET LIGHTING SHALL BE INSTALLED AND A MEANS PROVIDED TO CONTRACT FOR PUBLIC UTILITY SERVICES AND MAINTENANCE.

13. PRIOR TO START OF ANY EARTHWORK, THE SUBDIVIDER SHALL OBTAIN A GRADING PERMIT AS REQUIRED BY COUNTY ADOPTED U.B.C. (MODIFIED) AND GRADING ORDINANCE.

14. WHEELCHAIR RAMPS SHALL BE CONSTRUCTED AT ALL CURB RETURNS; SEE KERN COUNTY DEVELOPMENT STANDARDS, AS DIRECTED BY THE ENGINEER.

15. ALL EXISTING FACILITIES, INCLUDING BUT NOT LIMITED TO STRUCTURES, POLES, PIPELINES, CONDUCTS, CANALS, AND APPURTENANCES, WHICH ARE CONSIDERED TO BE OBSTRUCTIONS BY THE COUNTY ENGINEER, SHALL BE RELOCATED AT THE EXPENSE OF THE SUBDIVIDER.

16. NEW STREETS SHALL BE EXTENDED AT INTERSECTIONS AS DIRECTED BY THE COUNTY ENGINEER IN ORDER TO PROVIDE A SAFE CONNECTION TO THE EXISTING STREET PAVEMENT.

17. STORM DRAINAGE SUMP SHALL NOT BE ALLOWED TO ACCEPT WATER UNTIL SECURED BY PERMANENT FENCING OR IN THE CASE OF SHALLOW UNFENCED SUMPS NOT UNTIL COMPLIANCE WITH DEPTH AND SIDE SLOPE CRITERIA AS SET BY THE KERN COUNTY DEVELOPMENT STANDARDS.

18. ASPHALT REJUVENATING AGENT SHALL BE APPLIED TO NEW ASPHALT CONCRETE PAVEMENT, AS DIRECTED BY THE COUNTY ENGINEER, IN ACCORDANCE WITH THE PROVISIONS IN SECTION 37 "BITUMINOUS SEALS" OF THE STANDARD SPECIFICATIONS AND THE STATE DEPARTMENT OF TRANSPORTATION'S STANDARD SPECIAL PROVISIONS CURRENTLY IN EFFECT.

19. PAVEMENT GRINDING IN ACCORDANCE WITH SECTION 42 OF THE STANDARD SPECIFICATIONS SHALL BE PROVIDED AS DIRECTED BY THE COUNTY ENGINEER WHERE NEW PAVEMENT MEETS EXISTING PAVEMENT.

20. ALL MANHOLES WITHIN THE STREET RIGHT-OF-WAY SHALL BE ADJUSTED TO FINISHED GRADE PER K.C.D.S. PLATE NO. R-57.

21. SUBDIVISION SHALL BE INCLUDED IN C.S.A., 60 OF BENEFIT FOR STREETLIGHTS. STREETLIGHTS SHALL BE LS1 RATE SCHEDULE.

22. THE SUBDIVISION SHALL BE INCLUDED IN C.S.A., 60 ZONE OF BENEFIT 1 FOR STREET SWEEPING.

23. THE SUBDIVISION SHALL BE INCLUDED IN C.S.A., 60 ZONE OF BENEFIT 2 FOR DRAINAGE MAINTENANCE.

24. PRIOR TO FINAL ACCEPTANCE REPRODUCIBLE RECORD DRAWINGS FOR STREET, SHALL BE SUBMITTED BY THE DEVELOPER'S ENGINEER TO THE COUNTY.

25. SUBDIVISION SHALL BE INCLUDED IN MAINTENANCE.

26. ALL NEW UTILITY SERVICES SHALL BE PLACED UNDERGROUND. UNDERGROUND UTILITY CONSTRUCTION SHALL BE IN ACCORDANCE WITH THE PROVISIONS OF PUBLIC UTILITY COMMISSION GENERAL ORDER 95. ANY ABOVEGROUND CABINETS OR FACILITIES SHALL BE SCREENED IN A MANNER APPROVED BY THE DIRECTOR OF THE KERN COUNTY PLANNING DEPARTMENT. ANY ABOVEGROUND CABINETS OR FACILITIES LOCATED WITHIN THE ROAD RIGHT-OF-WAY SHALL BE PERMITTED ONLY UPON APPROVAL BY THE DIRECTOR OF THE KERN COUNTY ROADS DEPARTMENT. COMPLIANCE WITH THIS REQUIREMENT MAY RESULT IN THE NEED TO CREATE PUBLIC UTILITY EASEMENTS OUTSIDE OF THE RIGHT-OF-WAY.

27. PRIOR TO RECORDATION OF PARCEL MAP 11237, THE DEVELOPER SHALL SUBMIT A LETTER TO THE KERN COUNTY ROADS DEPARTMENT REQUESTING "NO PARKING" ALONG 7TH STANDARD ROAD, McMURTREY AVENUE, AND WISHON ROAD.

28. (A) DURING GRADING ANC CONSTRUCTION, LANDSCAPING AND/OR TEMPORARY SOIL STABILIZATION TECHNIQUES (I.E., JUTE NETTING OR SOIL STABILIZATION AGENTS) SHALL BE EMPLOYED TO REDUCE WIND EROSION AND DUST DURING GRADING AND UNTIL THE SITE IS FULLY BUILT OUT.

28. (B) IF DURING GRADING OR CONSTRUCTION, ANY PLUGGED AND ABANDONED OR UNRECORDED WELLS ARE UNCOVERED OR DAMAGED, THE DEPARTMENT OF CONSERVATION / DIVISION OF OIL, GAS, AND GEOTHERMAL RESOURCES SHALL BE CONTACTED TO INSPECT AND APPROVE ANY REMEDIATION REQUIRED.

29. SHOULD ANY CULTURAL MATERIALS BE DISCOVERED DURING ANY GRADING OR DEVELOPMENT, ALL WORK SHALL BE HALTED AND A QUALIFIED ARCHAEOLOGIST / HISTORIAN SHALL BE CONTACTED TO ASSESS THE FINDS AND IMPOSE MITIGATION MEASURES, IF NECESSARY, PRIOR TO THE RESUMPTION OF CONSTRUCTION.

30. NO BUILDING PERMITS SHALL BE ISSUED UNTIL ADEQUATE ACCESS AND ADEQUATE WATER SUPPLY FOR FIRE PROTECTION PURPOSES IS PROVIDED, AS APPROVED BY THE KERN COUNTY FIRE DEPARTMENT.

31. DURING GRADING OPERATIONS, THE APPLICANT FOR A DEVELOPMENT PERMIT SHALL BE RESPONSIBLE FOR THE APPLICATION OF WATER TO DEVELOPMENT SITE TO MITIGATE THE IMPACT OF DUST AND PM-10 (PARTICULATES) EMISSIONS. SPRAYING SHOULD BE SUFFICIENT TO ENSURE THAT SOILS REMAIN DAMP, WITH THE FREQUENCY OF SPRAYING DEPENDANT OF WEATHER CONDITIONS. VERIFICATIONS OF COMPLIANCE SHALL BE THE RESPONSIBILITY OF THE KERN COUNTY ENGINEERING AND SURVEY SERVICES DEPARTMENT / BUILDING INSPECTION DIVISION.

32. DURING GRADING OPERATIONS, ALL ACTIVITY SHALL BE RESTRICTED TO PERIODS OF LOW WIND TO REDUCE EMISSIONS. VERIFICATION OF COMPLIANCE WITH THIS MITIGATION MEASURE WILL BE THE RESPONSIBILITY OF THE KERN COUNTY ENGINEERING AND SURVEY SERVICES DEPARTMENT/BUILDING INSPECTION DIVISION.

LEGEND

N 45 ° 53' 08" E	BEARING AND DISTANCE PER SAID REFERENCED TITLE REPORT
VG	CONC. VALLEY GUTTER
PBMH	PACIFIC BELL MANHOLE
DI	DRAIN INLET
HCP	HANDICAP PARKING
PP	POWER POLE
OH	OVER HEAD
SSMH	SANITARY SEWER MANHOLE
W.M.	WATER METER
SD	STORM DRAIN
FDC	FIRE DEPT. CONNECTION
	STANDARD CITY OF FRESNO TRAFFIC SIGNAL
BFP	BACK FLOW PREVENTOR
TSB	TRAFFIC SIGNAL BOX
	PROP. LINE
	EASEMENT. LINE
10" SS	EXISTING 10" SEWER MAIN
WTR	EXISTING WATER SERVICE
SD	EXISTING STORM DRAINAGE PIPE & SIZE
	STORM DRAIN INLET
SD	STORM DRAIN MANHOLE
SS	SANITARY SEWER MANHOLE
	WATER VALVE
WM	WATER METER
	FIRE HYDRANT
	TREE
	STORM DRAIN DROP INLET
	LIGHT POLE WITH CONC. BASE
	CONC. TIRE STOP BAR
	DIRECTION OF FLOW
(E)	EXISTING
WV	WATER VALVE
T	TELEPHONE
TP	TRANSFORMER PAD
E B	ELECTRICAL BOX
GV	GAS VALVE
U R	UTILITY RISER
U B	UTILITY BOX
U V	UTILITY VALVE
CLEAN OUT	PIPE CLEAN OUT
G S	GAS SERVICE TO BUILDING
E S	ELECTRICAL SERVICE TO BUILDING
SLB	STREET LIGHT BOX

VICINITY MAP

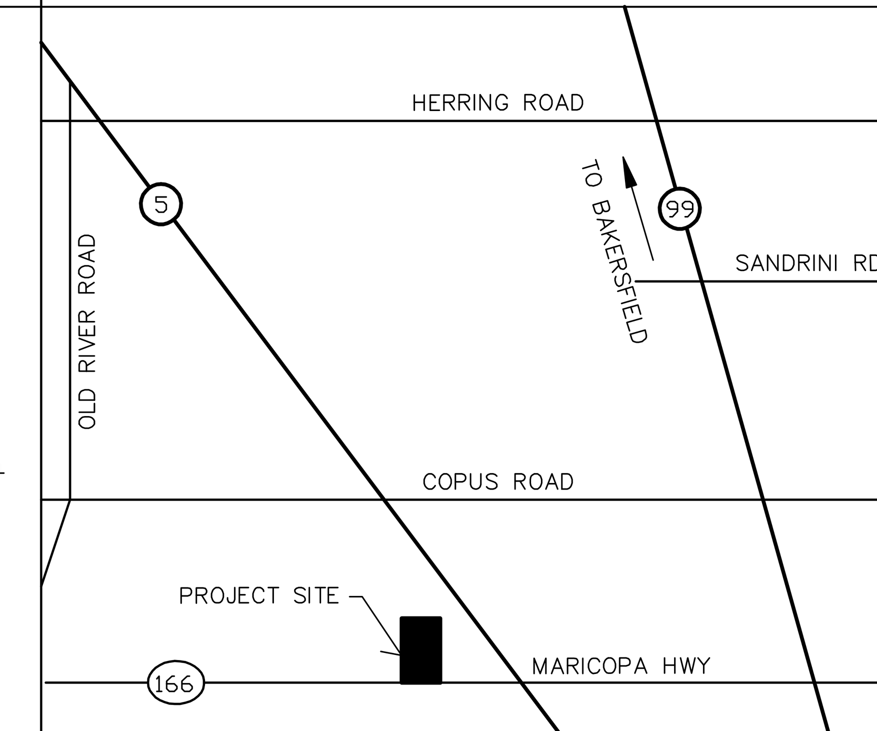

VICINITY MAP

N.T.S.

PREPARED FOR:

MR. DALJINDER S. CHAUHAN
PRINCE PROPERTIES
2300 PANAMA LANE
BAKERSFIELD, CA. 93307

APN

APN: 238-203-07

GENERAL NOTE:

CONTRACTOR TO REVIEW ALL OTHER PLANS FOR ADDITIONAL DEMOLITION INFORMATION.

BASIS OF ELEVATION

DESIGNATION – B 1209
PID – FU0236
STATE/COUNTY – CA/KERN
USGS QUAD – METTLER (1982)
ELEVATION= 525.0

SHEET INDEX

SHEET NO.	DESCRIPTION
C-1	COVER/INDEX SHEET
C-2	GRADING NOTES
C-3	TOPOGRAPHY & BOUNDARY MAP
C-4	GRADING AND DRAINAGE PLAN
C-5	OVERALL SITE UTILITY PLAN
C-6	ON-SITE LIGHT PLAN
C-7	STORM WATER POLLUTION PREVENTION PLAN
C-8	DETAIL SHEET
C-9	KERN COUNTY PLATES
L-1	LANDSCAPE PLANS
L-2	LANDSCAPE IRRIGATION PLANS
L-3	LANDSCAPE DETAIL SHEET

APPROVED BY:

APPROVED BY: COUNTY OF KERN ENGINEERING AND SURVEY SERVICES DEPARTMENT
CHARLES A. LACKEY, DIRECTOR

COVER SHEET
PRINCE TRUCK STOP

CITY OF BAKERSFIELD,
KERN COUNTY, CALIFORNIA
PD PLAN #2, MAP #203

PLOT DATE: 12-29-09 JOB. NO. : 09-208

This and all other project documents and all ideas, aesthetics and designs incorporated therein are instruments of service. All project documents are the registered property of Harbison International (HI) and cannot be lawfully used in whole or in part for any project or purpose except as described in the contractual agreement between HI and the Client. HI hereby gives formal notice that any such project document use, reproduction, or modification (misuse) is not only unlawful but also automatically binds all parties involved with misuse to fully indemnify and defend HI and HI's consultants to the maximum legal extent against all losses, demands, claims or liabilities arising directly or indirectly from project document misuse.

Project documents describe design intent of work and are not a representation of the as-built or existing conditions. HI and HI's consultants make no representations concerning the accuracy of documents and are not responsible for any discrepancies between project documents and the existing conditions.

REGISTERED PROFESSIONAL ENGINEER
DALE H WINN
No. 23273
Exp. 12-31-11
CIVIL
STATE OF CALIFORNIA

HARBISON INTERNATIONAL INC.,
ENGINEERS – SURVEYORS – PLANNERS
2755 E. SHAW AVE., SUITE 101, FRESNO, CA 93710
PHONE: (559) 294-7485 FAX: (559) 294-7481

PRINCE TRUCK STOP
BAKERSFIELD,
CALIFORNIA

REVISIONS
No. Date Desc.

Drawn: JMM
Checked: MAH
Approved: M. A. HAMZY
Project No.
Date: 6-21-11
Title
COVER SHEET
Sheet No.
C-1
OF 12 SHEETS

GENERAL COUNTY GRADING NOTES

Prior to the issuance of building or grading permits or the commencement of operations, whichever occurs first, the applicant shall submit the following information:

The development shall comply with all local, State, and Federal laws regarding the proposed aboveground petroleum storage.

A qualified biologist shall conduct a preconstruction biological survey within 30 days prior to the issuance of any grading or building permits or commencement of any project–related activities on the site, whichever action occurs first. These surveys shall be conducted during the appropriate time for the detection of potential special–status species that have the potential to occur within the project area. The results of these surveys shall be summarized in a written report that shall include site–specific recommendations, if found necessary. Copies of the biota report shall be submitted to the California Department of Fish and Game and the Kern County Planning and Community Development Department. The report shall be accompanied by evidence of the successful completion of any site–specific recommendations, including the acquisition of any required take permits, if necessary.

All topsoil, existing vegetation, organics, and debris should be removed from the project construction area.

The applicant shall consult with the California Regional Water Quality Control Board and provide the waste discharge requirements to the Kern County Public Health Services Department/Environmental Health Division for review and approval.

A professional archaeologist shall conduct an on–site field survey to determine if cultural resources are present on site within 30 days prior to the issuance of building or grading permits, or the commencement of any project–related activities on the site, whichever action occurs first. The result of those surveys shall be summarized in a written report that shall include site–specific recommendations, if found necessary. A copy of the report shall be provided to the Lead Agency to review for compliance and to the coordinator for the California Historical Resources Information System.

Buildings shall be designed to be energy efficient. Buildings shall be sited to take advantage of shade prevailing winds, landscaping, and sunscreens to reduce energy use.

The applicant shall develop a spill prevention and response plan addressing storage locations of any hazardous materials, spill prevention measures, training requirements, spill response kits, and procedures for notification to authorities in case of a spill.

The operator shall relocate the proposed well and establish a minimum setback of 100 feet from the drainage basin and any sewer, water–tight septic tank, and leaching field.

Landscaping shall be designed to avoid water collection or ponding of water adjacent to proposed structures.

To accommodate proposed truck traffic at the site, the developer shall redesign the proposal to include an 80–foot throat depth to the flow line to accommodate proposed truck traffic at the site.

Prior to initial ground disturbance:

A qualified biologist shall conduct a "tailgate" session for all construction personnel relative to all federal, State, and local law. All construction personnel shall be trained in sensitive species identification and avoidance techniques and that any evidence, such as sensitive species activity, dens or burrows observed at any time during construction be promptly reported to the reviewing agencies for resolution.

Prior to the issuance of building or grading permits:

The developer shall comply with any Climate Change Action Plan that is adopted by the Board of Supervisors.
All pipes, culverts, or similar small structures with a diameter of four inches or greater shall be capped to prevent entry of kit fox. All structures not capped or otherwise covered, shall be inspected prior to burial or closure to ensure that no kit fox or other protected species become entrapped.

Escape ramps shall be provided for any trenches or ditches left open during construction and deeper than 2 1/2 feet.

During construction all trash containers shall be located on site and all trash or other food wastes shall be placed in the designated containers.

During all topsoil stripping–related activities, a qualified soils engineer shall be on site in order to determine the extent of stripping necessary for pad construction and to minimize the loss of topsoil excavated at the site. Topsoil stripping should extend a minimum of five feet outside the building lines.

Roof draining should extend five feet from structures.

The footing type, size, and reinforcement should be designed by a structural engineer familiar with construction methods required for expansive soils.

All construction methods used on site shall be in compliance with the technical and engineering methods contained in the Geotechnical Engineering Report, dated January 13, 2010, and prepared by Central Valley Testing, Inc.

The developer shall install one or more of the following roofing technologies to the extent practicable to reduce energy consumption:

1.High albedo and low–emissive roofs

2.Environmental Protection Agency "Energy Star" approved roofing materials

3.Green Roof Technology

The developer shall use cool paving materials in parking areas to the greatest extent practicable. Examples of cool paving include asphalt and concrete with high solar reflectivity (i.e. through the use of light–colored aggregate), porous or permeable asphalt or concrete in areas where heavy duty paving materials are not necessary, roller compacted concrete and asphalt chip seals that employ light–colored aggregate.

Energy Star–rated energy efficient heating and cooling systems, appliances and equipment, and control systems shall be installed, as well as energy efficient lighting in parking and service areas (i.e. light emitting diodes).

The project shall reuse and recycle construction waste (including, but not limited to; soil, vegetation, concrete, lumber, metal, and cardboard.)

Best Performance Standards shall be used to assess the significance of project–specific greenhouse gas emissions on global climate change during the environmental review process.

All project construction workers exposed to noise levels above 80 decibels shall be provided with personal protective equipment for hearing protection (i.e. ear plugs or muffs). In any construction areas where noise levels are routinely expected to exceed 80 decibels, signs shall be posted that read "Hearing Protection Required in this Area."
Stripped topsoil shall not be used as fill material, although it is permissible to stockpile and reused stripped topsoil in landscaped areas.

Stockpiled topsoil shall not exceed 12 feet in height and shall be treated with a dust binder, as needed, to reduce the loss of topsoil from wind erosion.

A leak free sprinkler system shall be maintained in good operating conditions at all times.

Employers operating businesses within the project shall provide employees with information on alternative transportation for the regional area.

To reduce idling emissions, dock, delivery, and refueling areas shall include:

a.) Signage stating truck drivers shall turn off engines when not in use.

b.) Signage advising truck drivers of State law prohibiting diesel idling for longer than five minutes.

Property owners shall conduct manual refrigerant leak inspections on an annual basis for refrigeration systems with a charge of 50 to 200 pounds of refrigerant to ensure that the refrigerant systems are operating in accordance with manufacturer's specifications, repair refrigerated leaks promptly and keep records of all refrigerant leaks and repairs, storage, and disposal.

No sewage or sewage effluent shall be discharged within 100 feet (horizontally) of any surface body of water including sumps.

Each internal combustion engine used for any purpose on the job or job–related shall be equipped with an operating muffler of a type recommended by the manufacturer. No internal combustion engine shall be operated on the project site without said muffler.

When deemed necessary by California Department of Transportation, the property owner shall consolidate the two proposed driveways or provide greater separation between the driveways for the truck stop.

If any previously unknown archaeological or cultural resources are discovered, work in the area of discovery shall be stopped and a qualified archaeologist contacted to evaluate the find. A copy of the archaeologist's evaluation shall be submitted to the Kern County Planning and Community Development Department upon its issuance and any measures recommended by the archaeologist shall be implemented prior to resumption of work in the area of discovery

34. DURING GRADING AND CONSTRUCTION, ALL ACTIVITIES ADJACENT TO RESIDENTIAL DEVELOPMENT SHALL BE LIMITED TO 7:00 A.M. TO 7:00 P.M., MONDAY THROUGH FRIDAY. CONSTRUCTION WILL NOT BE ALLOWED ON WEEKENDS OR ON FEDERAL HOLIDAYS. VERIFICATION OF COMPLIANCE WITH THIS MITIGATION MEASURE OF THE ROSEDALE SPECIFIC PLAN WILL BE THE RESPONSIBILITY OF THE KERN COUNTY ENGINEERING AND SURVEY SERVICES DEPARTMENT / BUILDING INSPECTION DIVISION.

35. CONTRACTOR SHALL COMPLY WITH ALL REQUIREMENTS OF S.W.P.P.P. AND FUGITIVE DUST CONTROL PLAN (PM10).

36. THE CONTRACTOR SHALL MANUFACTURE SUB GRADE, MATERIALS BY MOVING, MIXING, AND BLENDING OR OTHER MEANS AT HIS DISPOSAL, TO OBTAIN A MINIMUM R VALUE OF 20 OR MORE. SEE LOCATION MAP PER THIS SHEET FOR R VALUES.

37. IF THE PROJECT IS SUBJECT TO THE PROVISIONS OF THE NATIONAL POLLUTANT DISCHARGE ELIMINATION SYSTEM (NPDES), A NOTICE OF INTENT (NOI) TO COMPLY WITH THE TERMS OF THE GENERAL PERMIT TO DISCHARGE STORM WATER ASSOCIATED WITH CONSTRUCTION ACTIVITY (WQ ORDER NO. 92–08–DWQ) MUST BE FILED WITH STATE WATER RESOURCES CONTROL BOARD IN SACRAMENTO BEFORE THE BEGINNING OF ANY CONSTRUCTION ACTIVITY. COMPLIANCE WITH THE GENERAL PERMIT REQUIRES THAT A STORM WATER POLLUTION PREVENTION PLAN (SWPPP) BE PREPARED, CONTINUOUSLY CARRIED OUT, AND ALWAYS BE AVAILABLE FOR PUBLIC INSPECTION DURING NORMAL CONSTRUCTION HOURS.

38. CALTRANS PERMIT #

39. THE SUBDIVIDER'S ENGINEER SHALL BE RESPONSIBLE FOR INSPECTION OF ALL IMPROVEMENTS OUTSIDE OF COUNTY ROAD RIGHT–OF–WAYS AND VERIFY SUCH TO THE COUNTY. NO CHANGES SHALL BE MADE TO THESE PLANS WITHOUT THE APPROVAL OF THE DIRECTOR.

40. SUBDIVIDER SHALL OBTAIN THE NECESSARY BUILDING, GRADING, AND ENCROACHMENT PERMITS PRIOR TO STARTING ANY WORK REQUIRED BY THESE PLANS.

41. PRIVATE STREETS SHALL COMPLY WITH ALL REQUIREMENTS OF THE KERN COUNTY FIRE DEPARTMENT.

UTILITY SEARCH

THE ENGINEER HAS MADE A DILIGENT SEARCH OF RECORDS, CONTACTED UTILITY COMPANIES AND OTHERWISE ENDEAVORED TO INDICATE ON THE DRAWINGS ALL UTILITIES WHICH EXIST WITHIN THE LIMITS OF THE WORK OF THIS PROJECT. HOWEVER, SINCE THE LOCATIONS AND DESCRIPTIONS WERE NOT ALL OBTAINED FROM ACTUAL FIELD SURVEYS THE ENGINEER DOES NOT ASSUME RESPONSIBILITY FOR ERRORS OR OMISSIONS. THE CONTRACTOR SHALL CONTACT THE OWNERS OF THE UNDERGROUND FACILITIES AND REQUEST THAT THEY LOCATE AND MARK ON THE GROUND THEIR FACILITIES PRIOR TO BEGINNING WORK. PRIOR TO DELIVERY OF ANY MATERIALS OR BEGINNING WORK. PRIOR TO DELIVERY OF ANY MATERIALS OR BEGINNING EXCAVATION FOR ANY CONSTRUCTION INCLUDING BUT NOT LIMITED TO SEWER LINES, WATER LINES, STORM DRAINS, STREETS, ETC., AND PRIOR TO BRINGING ANY ADDITIONAL MEN OR EQUIPMENT ON THE JOB, THE CONTRACTOR SHALL EXPOSE AND CONFIRM THE EXACT LOCATION OF ALL UNDERGROUND UTILITIES AND REPORT TO THE ENGINEER SAID LOCATIONS AND ANY POSSIBLE CONFLICT WITH HE WORK TO BE PREFORMED. THE ENGINEER SHALL THEN DETERMINE IF ANY REVISIONS TO THE DESIGN ARE REQUIRED AND PREPARE ANDY NECESSARY REVISIONS TO THE PLANS PRIOR TO THE CONTRACTOR PROCEEDING WITH ANY WORK ON OR AROUND THE AFFECTED LINE OR LINES. NO EXTRA COMPENSATION WILL BE ALLOWED FOR EXTRA COSTS INCURRED DUE TO CONTRACTOR'S FAILURE TO STRICTLY FOLLOW THIS PROCEDURE.

IN ACCORDANCE WITH GENERAL ACCEPTED CONSTRUCTION PRACTICES, CONTRACTORS SHALL ASSUME SOLE RESPONSIBILITY FOR JOB SITE CONDITIONS DURING THE COURSE OF REQUIREMENT APPLIES CONTINUOUSLY AND IS NOT LIMITED TO NORMAL WORKING HOURS. CONTRACTOR SHALL DEFEND, INDEMNIFY AND HOLD THE DESIGN PROFESSIONAL(S) HARMLESS FROM ANY AND ALL LIABILITY, REAL OR ALLEGED, IN CONNECTION WITH THE PERFORMANCE OF WORK ON THIS PROJECT, EXCEPTING LIABILITY ARISING FROM THE SOLE NEGLIGENCE OF DESIGN PROFESSIONAL(S).

CALL 1–900–624–2444 FOR COUNTY OF KERN.

GRADING NOTES
PRINCE TRUCK STOP

CITY OF BAKERSFIELD,
KERN COUNTY, CALIFORNIA
PD PLAN #2, MAP #203
SHEET 2 OF 12

This and all other project documents and all ideas, aesthetics and designs incorporated therein are instruments of service. All project documents are the registered property of Harbison International (HI) and cannot be lawfully used in whole or in part for any project or purpose except as described in the contractual agreement between HI and the Client. HI hereby gives formal notice that any such project document use, reproduction, or modification (misuse) is not only unlawful but also automatically binds all parties involved with misuse to fully indemnify and defend HI and HI's consultants to the maximum legal extent against all losses, demands, claims or liabilities arising directly or indirectly from project document misuse.

Project documents describe design intent of work and are not a representation of the as–built or existing conditions. HI and HI's consultants make no representations concerning the accuracy of documents and are not responsible for any discrepancies between project documents and the existing conditions.

REGISTERED PROFESSIONAL ENGINEER
DALE H WINN
No. 23273
Exp. 12–31–11
CIVIL
STATE OF CALIFORNIA

HARBISON INTERNATIONAL INC.,
ENGINEERS – SURVEYORS – PLANNERS
2755 E. SHAW AVE., SUITE 101, FRESNO, CA 93710
PHONE: (559) 294–7485 FAX: (559) 294–7481

PRINCE TRUCK STOP
BAKERSFIELD, CALIFORNIA

REVISIONS

No.	Date	Desc.

Drawn: JMM
Checked: MAH
Approved: M. A. HAMZY
Project No.
Date: 6–21–11
Title: NOTES
Sheet No. C–2
OF 12 SHEETS

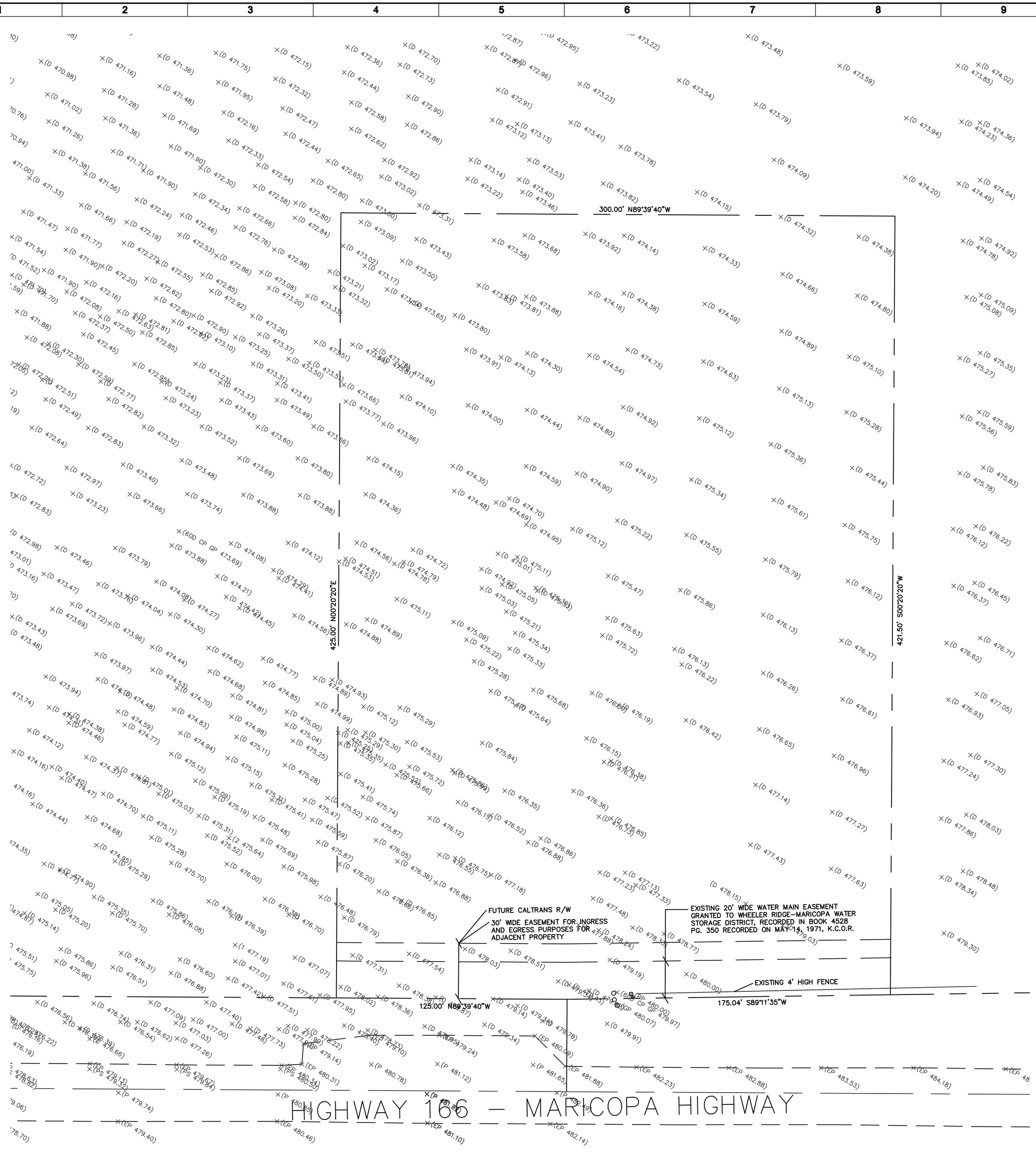

LEGEND

N 45 ° 53' 08" E	MEASURED BEARING AND DISTANCE
VG	CONC. VALLEY GUTTER
PBMH	PACIFIC BELL MANHOLE
DI	DRAIN INLET
HCP	HANDICAP PARKING
PP	POWER POLE
OH	OVER HEAD
SSMH	SANITARY SEWER MANHOLE
W.M.	WATER METER
SD	STORM DRAIN
FDC	FIRE DEPT. CONNECTION
→	DIRECTION OF FLOW
(E)	EXISTING
WV	WATER VALVE
T	TELEPHONE
———	PROP. LINE
———	EASEMENT. LINE
—10" SS—	EXISTING 10" SEWER MAIN
—WTR—	EXISTING WATER SERVICE
—SD—	EXISTING STORM DRAINAGE PIPE & SIZE
	STORM DRAIN INLET
	STORM DRAIN MANHOLE
	SANITARY SEWER MANHOLE
	WATER VALVE
	WATER METER
	FIRE HYDRANT
	TREE

PREPARED FOR:

MR. DALJINDER S. CHAUHAN
PRINCE PROPERTIES
2300 PANAMA LANE
BAKERSFIELD, CA. 93307

BASIS OF ELEVATION

DESIGNATION – B 1209
PID – FU0236
STATE/COUNTY – CA/KERN
USGS QUAD – METTLER (1982)

ELEVATION= 525.0

APN

APN: 238-203-07

NELSON

SCALE: 1" = 30'

30' 15' 0' 30'

TOPO AND BOUNDARY PRINCE TRUCK STOP

CITY OF BAKERSFIELD,
KERN COUNTY, CALIFORNIA
PD PLAN #2, MAP #203
SHEET 3 OF 12 SHEETS

PLOT DATE: 6-21-11 JOB. NO. : 09-208

The end all other project documents and all ideas, esthetics and designs incorporated herein are instruments of service and shall remain the property of Harbison International (HI) and cannot be lawfully used in whole or in part for any project or purpose except as described in the contractual agreement between HI and the Client. HI expressly reserves its common law copyright and other property rights in these documents. (misuse) is not only unlawful but also automatically binds all parties involved with misuse to fully indemnify and defend HI and HI's consultants to the maximum legal extent against all claims, damages and attorney's fees arising out of misuse of any property rights in these Project documents describe design intent of work and may not represent all of the as-built or existing conditions. HI and HI's consultants make no representations concerning the accuracy of documents and are not responsible for any discrepancies between project documents and the existing conditions.

REGISTERED PROFESSIONAL ENGINEER
MARK A. HAMZY
No. 23273
Exp. 12-31-11
CIVIL
STATE OF CALIFORNIA

HARBISON INTERNATIONAL INC.,
ENGINEERS – SURVEYORS – PLANNERS
2755 E. SHAW AVE., SUITE 101, FRESNO, CA 93710
PHONE: (559) 294-7485 FAX: (559) 294-7481

PRINCE TRUCK STOP
BAKERSFIELD, CALIFORNIA

REVISIONS
No. Date Desc.

Drawn: JMM
Checked: MAH
Approved: M. A. HAMZY

Project No.
Date: 6-21-11

Title
TOPO SHEET

Sheet No.
C-3
OF 12 SHEETS

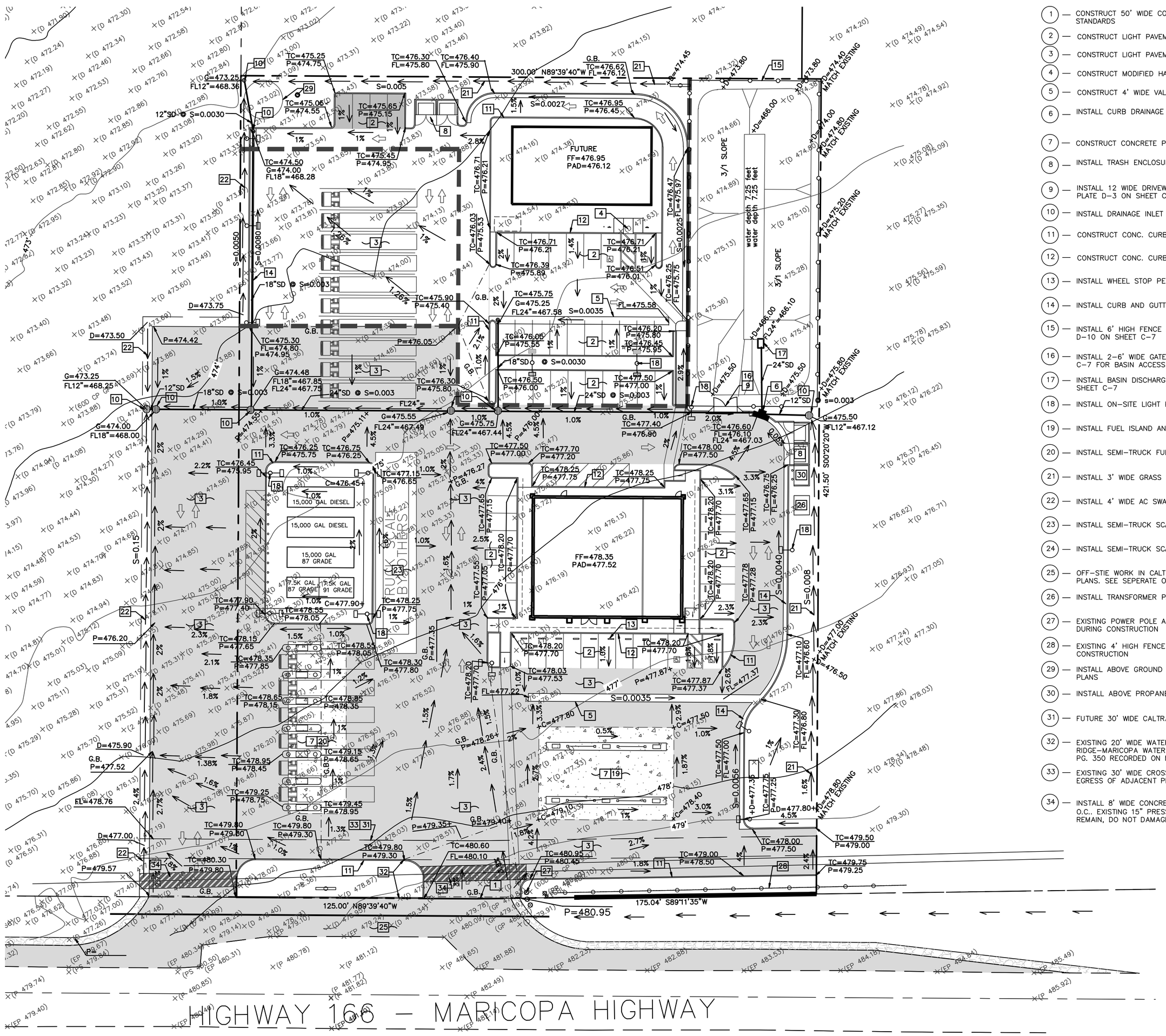

CONSTRUCTION NOTES

1. CONSTRUCT 50' WIDE COMMERCIAL DRIVEWAY PER KERN COUNTY STANDARDS
2. CONSTRUCT LIGHT PAVEMENT PER DETAIL 8 ON SHEET C–6
3. CONSTRUCT LIGHT PAVEMENT PER DETAIL 13 ON SHEET C–6
4. CONSTRUCT MODIFIED HANDICAP RAMP PER DETAIL 5 ON SHEET C–6
5. CONSTRUCT 4' WIDE VALLEY GUTTER PER DETAIL 2 ON SHEET C–6
6. INSTALL CURB DRAINAGE INLET PER COUNTY STANDARDS
7. CONSTRUCT CONCRETE PAVEMENT PER DETAIL 7 ON SHEET C–6
8. INSTALL TRASH ENCLOSURE PER COUNTY STD.
9. INSTALL 12 WIDE DRIVEWAY AND ACCESS TO BASIN PER COUNTY PLATE D–3 ON SHEET C–6
10. INSTALL DRAINAGE INLET PER COUNTY STD.
11. CONSTRUCT CONC. CURB PER DETAIL 13 ON SHEET C–6
12. CONSTRUCT CONC. CURB AND SIDEWALK PER DETAIL 16 ON SHEET C–6
13. INSTALL WHEEL STOP PER DETAIL 12 ON SHEET C–6
14. INSTALL CURB AND GUTTER PER DETAIL 9 ON SHEET C–6
15. INSTALL 6' HIGH FENCE AROUND THE BASIN AS PER COUNTY PLATE D–10 ON SHEET C–7
16. INSTALL 2–6' WIDE GATES AS PER COUNTY PLATE D–10 ON SHEET C–7 FOR BASIN ACCESS
17. INSTALL BASIN DISCHARGE STRUCTURE PER COUNTY PLATE D–2 ON SHEET C–7
18. INSTALL ON–SITE LIGHT PER DETAIL ON SHEET C–6
19. INSTALL FUEL ISLAND AND CANOPY PER SEPARATE PLANS
20. INSTALL SEMI–TRUCK FUEL ISLAND AND CANOPY PER SEPARATE PLANS
21. INSTALL 3' WIDE GRASS SWALE PER DETAIL 14 ON SHEET C–6
22. INSTALL 4' WIDE AC SWALE PER DETAIL 15 ON SHEET C–6
23. INSTALL SEMI–TRUCK SCALE PER SEPARATE PLANS
24. INSTALL SEMI–TRUCK SCALE PER SEPARATE PLANS
25. OFF–STIE WORK IN CALTRANS RIGHT–OF–WAY NOT PART OF THESE PLANS. SEE SEPERATE OFF–SITE PLANS
26. INSTALL TRANSFORMER PAD. ELECTRICAL PLANS BY OTHERS
27. EXISTING POWER POLE AND GUARD POSTS TO REMAIN. DO NO DAMAGE DURING CONSTRUCTION
28. EXISTING 4' HIGH FENCE TO REMAIN. DO NOT DAMAGE DURING CONSTRUCTION
29. INSTALL ABOVE GROUND WATER TANK, WELL & PUMP PER SEPARATE PLANS
30. INSTALL ABOVE PROPANE FUEL TANKS – DESIGN BY OTHERS
31. FUTURE 30' WIDE CALTRANS R/W
32. EXISTING 20' WIDE WATER MAIN EASEMENT GRANTED TO WHEELER RIDGE–MARICOPA WATER STORAGE DISTRICT, RECORDED IN BOOK 4528 PG. 350 RECORDED ON MAY 14, 1971, K.C.O.R.
33. EXISTING 30' WIDE CROSS ASSESS EASEMENT FOR INGRESS AND EGRESS OF ADJACENT PROPERTY
34. INSTALL 8' WIDE CONCRETE BLANKET 6" THICK WITH #4 REBAR @ 2' O.C.. EXISTING 15" PRESSURIZED CONCRETE ASBESTOS PIPELINE TO REMAIN, DO NOT DAMAGE DURING CONSTRUCTION.

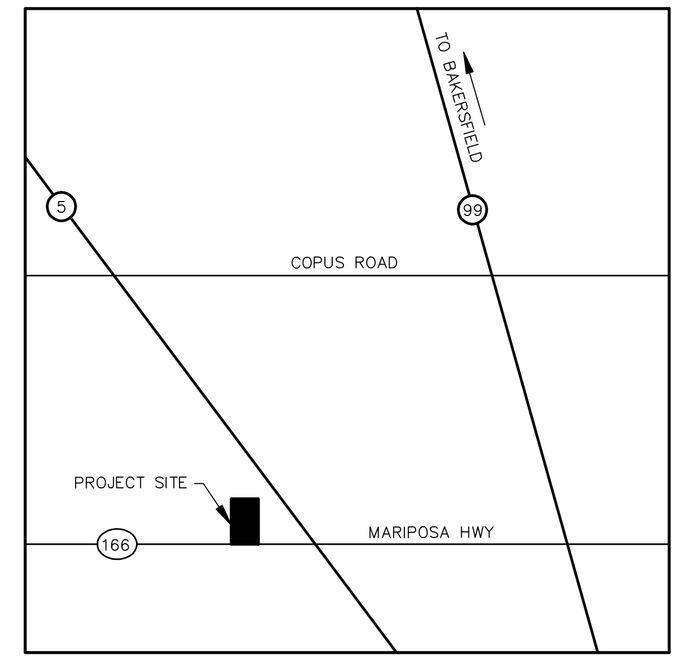

LEGEND

N 45 ° 53' 08" E	MEASURED BEARING AND DISTANCE
VG	CONC. VALLEY GUTTER
PBMH	PACIFIC BELL MANHOLE
DI	DRAIN INLET
HCP	HANDICAP PARKING
PP	POWER POLE
OH	OVER HEAD
SSMH	SANITARY SEWER MANHOLE
W.M.	WATER METER
SD	STORM DRAIN
FDC	FIRE DEPT. CONNECTION
→	DIRECTION OF FLOW
(E)	EXISTING
WV	WATER VALVE
T	TELEPHONE
———	PROP. LINE
———	EASEMENT. LINE
—10" SS—	EXISTING 10" SEWER MAIN
—WTR—	EXISTING WATER SERVICE
—SD—	EXISTING STORM DRAINAGE PIPE & SIZE
	STORM DRAIN INLET
	STORM DRAIN MANHOLE
	SANITARY SEWER MANHOLE
	WATER VALVE
	WATER METER
	FIRE HYDRANT
	TREE

NORTH

SCALE: 1" = 30'
30' 15' 0' 30'

PREPARED FOR:

MR. DALJINDER S. CHAUHAN
PRINCE PROPERTIES
2300 PANAMA LANE
BAKERSFIELD, CA. 93307

BASIS OF ELEVATION

DESIGNATION – B 1209
PID – FU0236
STATE/COUNTY – CA/KERN
USGS QUAD – METTLER (1982)

ELEVATION= 525.0

APN

APN: 238–203–07

PRINCE TRUCK STOP
GRADING AND DRAINAGE PLAN

CITY OF BAKERSFIELD,
KERN COUNTY, CALIFORNIA
PD PLAN #2, MAP #203
SHEET 4 OF 12 SHEETS

PLOT DATE: 6–21–11 JOB. NO. : 09–208

This and all other project documents and all ideas, aesthetics and designs incorporated therein are instruments of service. All project documents are the registered property of Harbison International Inc. and shall not be used by any person for any purpose except as described in the contracted agreement between CA and the Client. CA hereby gives formal notice that any such project document use, reproduction, or modification by any person other than CA or by others on behalf of the Client without CA's written consent is fully indemnify and defend CA and CA's consultants to the maximum legal extent against all losses, demands, claims or liabilities arising directly or indirectly from project document misuse.

Project documents describe design intent of work and are not a representation of the as–built or existing conditions. CA and CA's consultants are not responsible for any discrepancies between project documents and the existing conditions.

REGISTERED PROFESSIONAL ENGINEER
DAVE H WINN
No. 23273
Exp. 12-31-09
CIVIL
STATE OF CALIFORNIA

HARBISON INTERNATIONAL INC.,
ENGINEERS – SURVEYORS – PLANNERS
2755 E. SHAW AVE., SUITE 101, FRESNO, CA 93710
PHONE: (559) 294–7485 FAX: (559) 294–7481

PRINCE TRUCK STOP
KERN COUNTY
CALIFORNIA

REVISIONS
No. Date Desc.

Drawn: JPS
Checked: MAH
Approved: M. A. HAMZY

Project No.
Date: 6–21–11

Title
GRADING AND DRAINAGE

Sheet No.
C–4
OF 12 SHEETS

UTILITY NOTES

1. SEE LANDSCAPE DRAWINGS FOR IRRIGATION PIPING. SEE ELECTRICAL DRAWINGS FOR ELECTRICAL RUNS.
2. INSTALL IRRIGATION SLEEVES PER LANDSCAPE PLANS.
3. INSTALL ELECTRICAL CONDUIT AND SLEEVES PER ELECTRICAL PLANS.
4. THE LOCATION OF EXISTING UNDERGROUND UTILITIES ARE SHOWN IN AN APPROXIMATE WAY ONLY AND HAVE NOT BEEN INDEPENDENTLY VERIFIED BY THE OWNER OR ITS REPRESENTATIVE. THE CONTRACTOR SHALL DETERMINE THE EXACT LOCATION OF ALL EXISTING UTILITIES BEFORE COMMENCING WORK, AND AGREES TO BE FULLY RESPONSIBLE FOR ANY AND ALL DAMAGES WHICH MIGHT BE OCCASIONED BY THE CONTRACTOR'S FAILURE TO EXACTLY LOCATE AND PRESERVE ANY AND ALL UNDERGROUND UTILITIES. THE CONTRACTOR SHALL CONTACT UNDERGROUND SERVICE ALERT (USA) AT (800) 642-2444 TO INDICATE EXISTING UTILITIES AT LEAST 48 HOURS PRIOR TO BEGINNING WORK. THE CONTRACTOR SHALL TAKE PRECAUTIONARY MEASURES TO PROTECT THESE UTILITIES. THE CONTRACTOR SHALL DO NO EXCAVATION UNTIL ALL UTILITY AGENCIES AND THE CITY HAVE BEEN NOTIFIED AND HAVE BEEN GIVEN THE OPPORTUNITY TO MARK THEIR FACILITIES IN THE FIELD.
5. 48 HOURS PRIOR TO EXCAVATION, THE CONTRACTOR SHALL NOTIFY UNDERGROUND SERVICE ALERT TOLL FREE, AT 1800-642-2444
6. ALL MATERIALS AND WORKMANSHIP SHALL CONFORM TO THE REQ. OF THE ADOPTED PLUMBING CODE AND CITY OF FRESNO STD. PLANS AND SPEC.
7. PRIOR TO COMMENCING EXCAVATION, THE CONTRACTOR SHALL NOTIFY ALL UTILITY COMPANIES AND AGENCIES HAVING POSSIBLE INTEREST IN THE WORK OR ANY EXCAVATION WITH PROXIMATE AREA TO EXISTING FACILITIES.
8. ALL CONDUIT AND TRENCHING BY G.C.
9. G.C. TO COORDINATE A MEETING WITH UTILITY COMPANIES PRIOR TO CONSTRUCTION START.

CONSTRUCTION NOTES :

(1A) CONSTRUCT 6" D.C.V. FOR FIRE SYSTEM

(1B) CONSTRUCT 2" B.F. PREVENTOR FOR LANDSCAPE SPRINKLER SYSTEM PER PUBLIC WORK STD. W-11

(1) INSTALL 8" WATER METER AND BACKFLOW PREVENTOR PER CITY OF FRESNO STD. W-11

(2) EXISTING SEWER MANHOLE PER CITY OF FRESNO RECORDS. EXPOSE IN THE FIELD, VERIFY FLOW LINE AND CONNECT TO EXISTING SEWER MANHOLE WITH TYPE B DROP SEWER MAIN CONNECTION PER CITY OF FRESNO STANDARD S-11.

(3) INSTALL FIRE HYDRANT ASSEMBLY PER CITY OF FRESNO STD. W-3

(4) INSTALL 48" SEWER MANHOLE PER CITY OF FRESNO STD. S-3

(5) LOCATE AND TIE INTO EXISTING 8" WATER STUB

(6) TIE TO EXISTING 8" WATER MAIN. INSTALL 1-8" VALVE AND 1- 8" x 8" x 8" TEE.

(7) INSTALL PERMANENT BLOW OFF ASSEMBLY PER CITY STD. W-10.

(8) 48 HOURS PRIOR TO EXCAVATION, THE CONTRACTOR SHALL NOTIFY UNDERGROUND SERVICE ALERT TOLL FREE, AT 1800-642-2444

(9) ALL MATERIALS AND WORKMANSHIP SHALL CONFORM TO THE REQUIREMENTS OF THE ADOPTED PLUMBING CODE AND CITY OF FRESNO STANDARD PLANS AND SPECIFICATIONS.

(10) PRIOR TO COMMENCING EXCAVATION, THE CONTRACTOR SHALL NOTIFY ALL UTILITY, AUTHORITIES OR UTILITY COMPANIES HAVING POSSIBLE INTEREST IN THE WORK OR THE CONTRACTORS INTENTION TO EXCAVATE PROXIMATE TO EXISTING FACILITIES.

(11) SAW-CUT EXISTING PAVEMENT AND RECAP ALL TRENCHES PER CITY STD. S-10

(12) INSTALL THRUST BLOCK PER CITY STD. W-6 (TYP ALL WATER)

SEWER CONSTRUCTION NOTES

1. Contractor shall obtain city permit at least five days prior to commencing construction.
2. All construction shall conform to the adopted City of Fresno Sanitation District Wastewater Sewer Design and Construction Standards as amended.
3. Construct P.V.C. SDR-35 sewer pipe as noted below.
4. Warning: connection to existing sewer facilities shall be done only in the presence of the District Inspector.
5. The location and existence or nonexistence of underground utilities has been determined to the best of the design engineer's ability; but it shall be the sole duty of the contractor to verify the location of the existing utilities and to take all necessary precaution to avoid damage to these utilities. The contractor shall assume sole responsibility for any damage done to the existing utilities during construction.
6. Separation between wastewater and water line shall be in accordance with the City of Fresno Construction Standards.
7. All trench backfill and compaction in public right-of-way above the pipe zone will be under the supervision of the City Inspector.
8. The contractor shall maintain a record of the location of all wastewater laterals tees and stubouts. This record shall be delivered to the developer's engineers prior to final payment being authorized.
9. The contractor shall mark the location of all wastewater laterals with the letter "s" 4" high engraved into the curb.

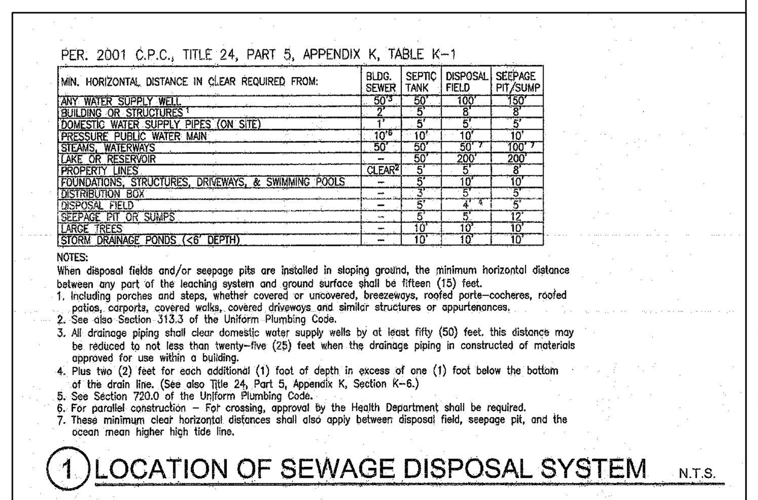

(1) LOCATION OF SEWAGE DISPOSAL SYSTEM N.T.S.

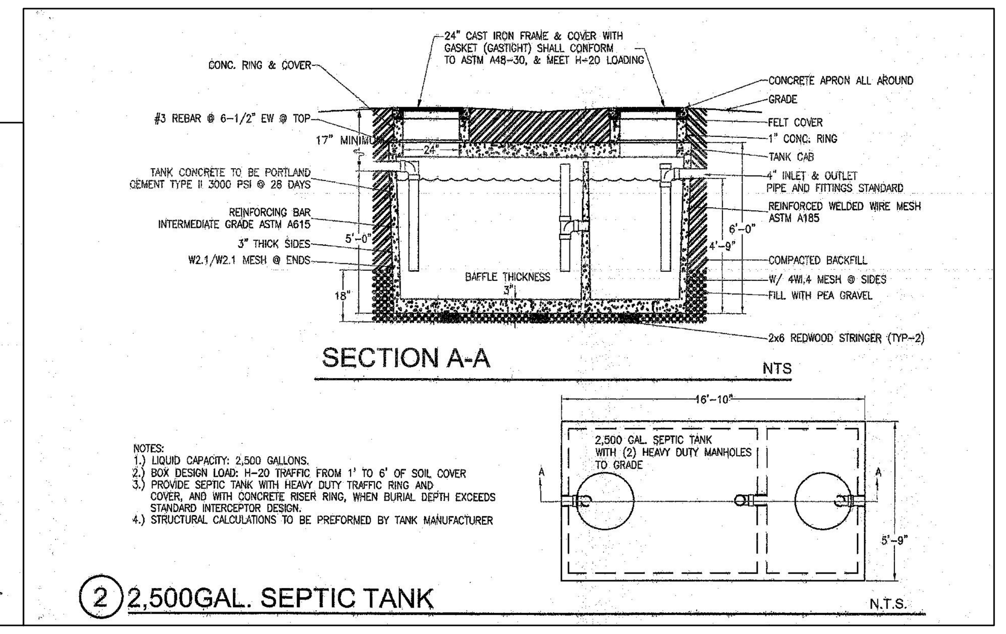

(2) 2,500GAL. SEPTIC TANK

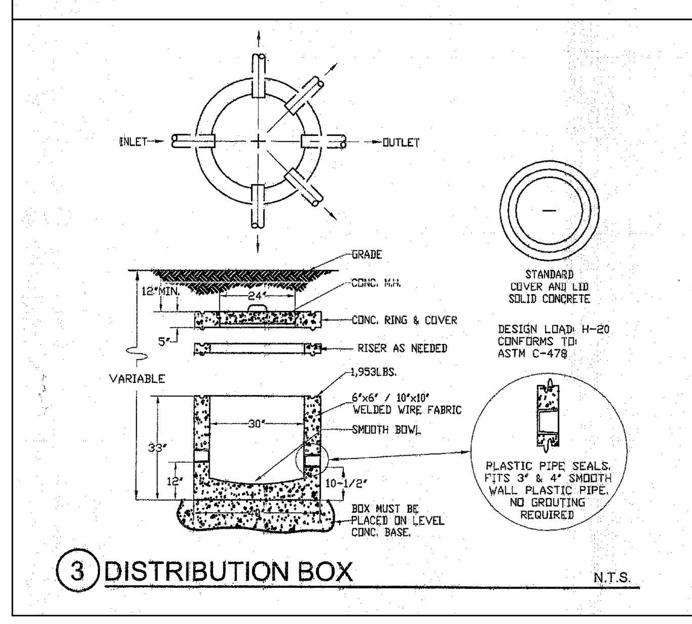

(3) DISTRIBUTION BOX N.T.S.

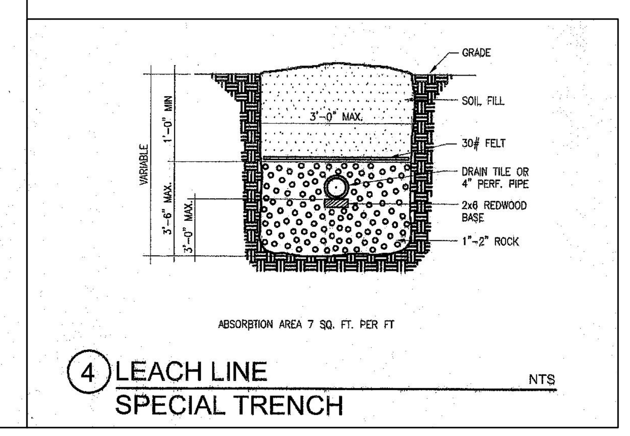

(4) LEACH LINE SPECIAL TRENCH NTS

UTILITY LEGEND

—SD—	STORM DRAIN
—S—	CONSTRUCT SANITARY SEWER MAIN PER CITY OF FRESNO STANDARD SPECIFICATIONS. SDR-35. SIZE AS NOTED.
—W—	CONSTRUCT DOMESTIC WATER MAIN PER CITY OF FRESNO STANDARD SPECIFICATION
—FP—	CONSTRUCT FIRE PROTECTION MAIN PER CITY OF FRESNO STANDARD SPECIFICATION AND N.F.P.A.24 REQUIREMENTS.
	CONSTRUCT 48" SEWER MANHOLE PER CITY OF FRESNO STD. S-3
	CONSTRUCT SEWER CLEANOUT PER CITY OF FRESNO STD S-6 MAXIMUM SPACING 100 FEET.
	INSTALL VALVE WITH CASING AND LID PER CITY STD. W-7
	INSTALL FIRE HYDRANT ASSEMBLY PER CITY STD. W-3 AND W-4.
	PROPOSED ON SITE LIGHTS
—10" SS—	EXISTING 10" SEWER MAIN
—WTR—	EXISTING WATER SERVICE
—SD—	EXISTING STORM DRAINAGE PIPE & SIZE
SD	EXISTING STORM DRAIN MANHOLE
SS	EXISTING SEWER MANHOLE
	EXISTING WATER VALVE
WM	EXISTING WATER METER
	EXISTING FIRE HYDR.
	EXISTING STREET LIGHT & BOX
—E—	ELECTRICAL CONDUIT
—G—	NATURAL GAS LINE. CONFIRM LOCATION WITH UTILITY COMPANY
	IRRIGATION CONDUIT SLEEVE
	LIMITS OF CONSTRUCTION
	PROPERTY LINE

CO	CLEAN OUT TO GRADE	P.O.C.	POINT OF CONNECTION
ODS	DOWN SPOUT		FIRE HYDRANT
	PROPOSED MANHOLE	WM	WATER METER
	EXISTING STORM DRAIN INLET		BACKFLOW PREVENTOR
	DOUBLE FIRE DETECTOR CHECK F.D.C. ASSEMBLY		FIRE DEPARTMENT CONNECTION
		TG	TOP OF GRATE OR COVER ELEVATION
CB	CATCH BASIN		
IE	INVERT ELEVATION	FDC	FIRE DEPARTMENT CONNECTION
BW	BACK OF WALK	(E)	EXISTING
POC	POINT OF CONNECTION		EXISTING TREES

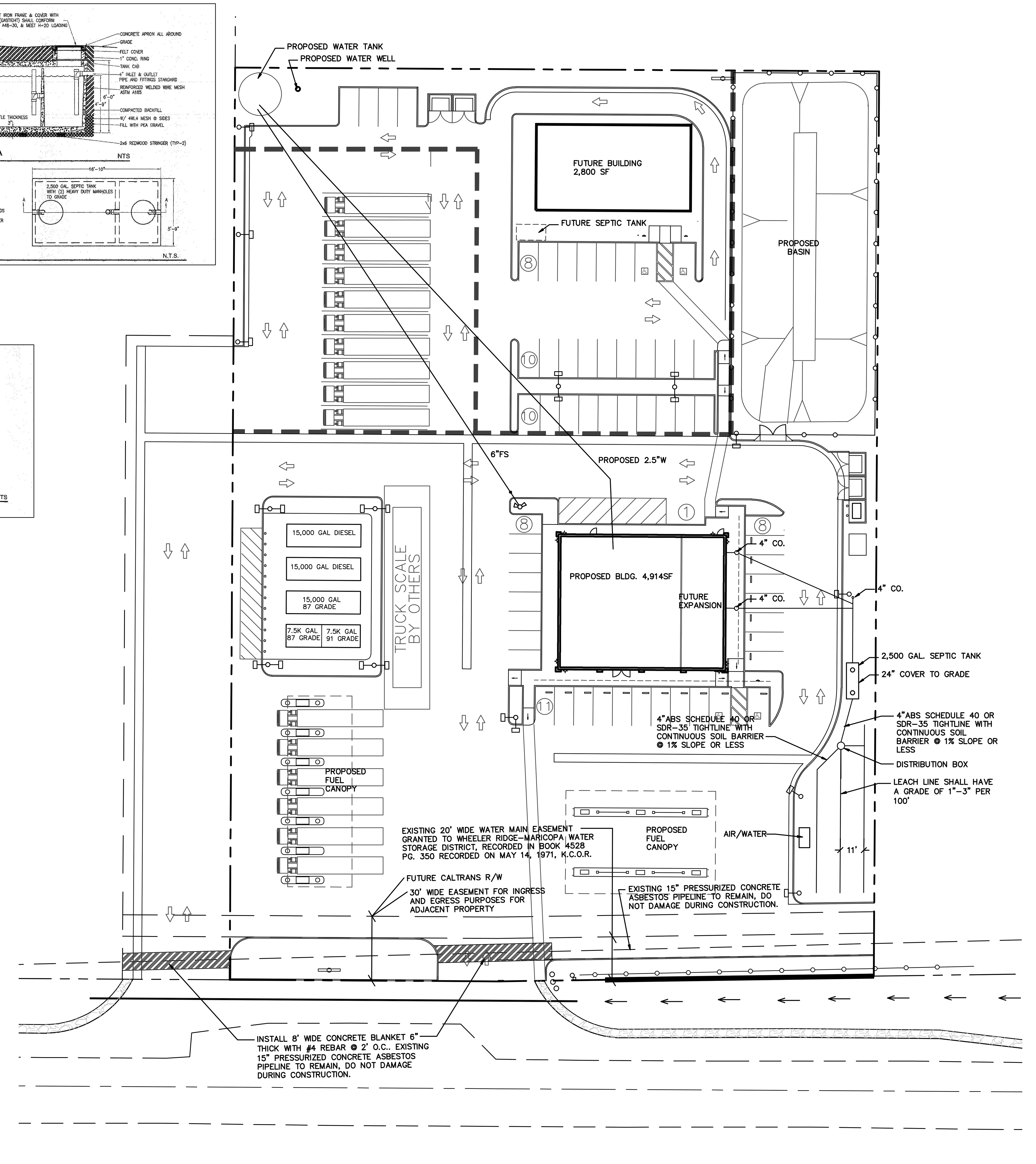

SCALE 1' = 30'

UTILITY VERIFICATION

PRIOR TO START OF ANY WORK, THE CONTRACTOR SHALL VERIFY THE LOCATION, ELEVATION AND MATERIAL TYPE FOR ALL EXISTING UNDERGROUND UTILITIES THROUGHOUT THE SITE AND AT THE POINTS OF CONNECTION. THE CONTRACTOR SHALL VERIFY THAT THE PROPOSED UTILITY SERVICE WILL MEET THE INDICATED PIPE SLOPES AND IMMEDIATELY NOTIFY THE CLIENT REPRESENTATIVE AND RHL DESIGN GROUP, INC. OF ANY CONDITION(S) THAT WILL PREVENT CONSTRUCTION OF NEW UTILITY SERVICES AS INDICATED ON THE PLANS. THE CONTRACTOR SHALL BE FULLY RESPONSIBLE FOR ALL ADDITIONAL COST INCLUDING BUT NOT LIMITED TO REDESIGN, CONSTRUCTION, INSPECTION, AND LIQUIDATED DAMAGES RESULTING FROM THE CONTRACTOR'S FAILURE TO PERFORM UTILITY VERIFICATION.

SITE UTILITY PLAN
PROPOSED GAS STATION / TRUCK STOP SITE

CITY OF BAKERSFIELD,
KERN COUNTY, CALIFORNIA
PD PLAN #2, MAP #203
SHEET 5 OF 12

PLOT DATE: 6-21-11 JOB. NO. : 09-208

This and all other project documents and all ideas, aesthetics and designs incorporated therein are instruments of service. All project documents are the registered property of Harbison International (HI) and cannot be lawfully used in whole or in part for any project or purpose except as described in the contractual agreement between HI and the Client. HI hereby gives formal notice that any such project document use, reproduction, or modification (misuse) is not only unlawful but also automatically binds all parties involved with misuse to fully indemnify and defend HI and HI's consultants to the maximum legal extent against all losses, demands, claims or liabilities arising directly or indirectly from project document misuse.

Project documents describe design intent of work and are not a representation of the as-built or existing conditions. HI and HI's consultants make no representations concerning the accuracy of documents and are not responsible for any discrepancies between project documents and the existing conditions.

REGISTERED PROFESSIONAL ENGINEER DALE H WINN No. 23273 Exp. 12-31-11 CIVIL STATE OF CALIFORNIA

HARBISON INTERNATIONAL INC.,
ENGINEERS – SURVEYORS – PLANNERS
2755 E. SHAW AVE., SUITE 101, FRESNO, CA 93710
PHONE: (559) 294-7485 FAX: (559) 294-7481

PROPOSED GAS STATION & TRUCK STOP
BAKERSFIELD,
CALIFORNIA

REVISIONS		
No.	Date	Desc.

Drawn: JMM
Checked: MAH
Approved: M. A. HAMZY
Project No.
Date: 6-21-11
Title: SITE UTILITY
Sheet No. C-5
OF 12 SHEETS

LEGEND

0.00 (E) OR (0.00)	EXISTING SPOT ELEVATION
0.00	PROPOSED ELEVATION
	DIRECTION OF DRAINAGE FLOW
N 0° 0' 00" W	PROPERTY LINE
G.B.	GRADE BREAK
	LIMIT OF WORK
	EXISTING DRAIN INLET

BW	BACK OF WALK	LIP	EDGE OF SWALE OR GUTTER
FG	FINISH GRADE	TC	TOP OF CURB
FL	FLOW LINE	TG	TOP OF GRATE
GB	GRADE BREAK	TW	TOP OF WALL
IE	INVERT ELEVATION	FS	TOP OF SLAB
EG	EXISTING GRADE	(E)	EXISTING
FH	FIRE HYDRANT	H	WALL HEIGHT
HP	HIGH POINT	RD	ROOF DRAIN
TF	TOP OF FOOTING	C/P	CONCRETE MEETS PAVEMENT
TF	TOP OF FOOTING	C	CONCRETE
CB	CATCH BASIN	G	GUTTER
		PAD	DIRT PAD
		FF	FINISHED FLOOR
		D	DIRT
		P	FINISHED PAVEMENT ELEVATION

NOTE:

THIS GRADING PLAN IS FOR APPROVAL OF ON-SITE ELEVATIONS ONLY. THE ELEVATIONS SHOWN WITHIN THE PUBLIC RIGHT-OF-WAY REQUIRE SEPARATE PUBLIC WORKS DEPARTMENT APPROVAL & PERMIT. ANY NOTES THAT APPLY TO THE PUBLIC RIGHT-OF-WAY ARE FOR REFERENCE ONLY. IF ON-SITE ELEVATIONS SHOWN DO NOT COINCIDE WITH APPROVED STREET PLANS, AN APPROVED AMENDMENT IS REQUIRED.

1.

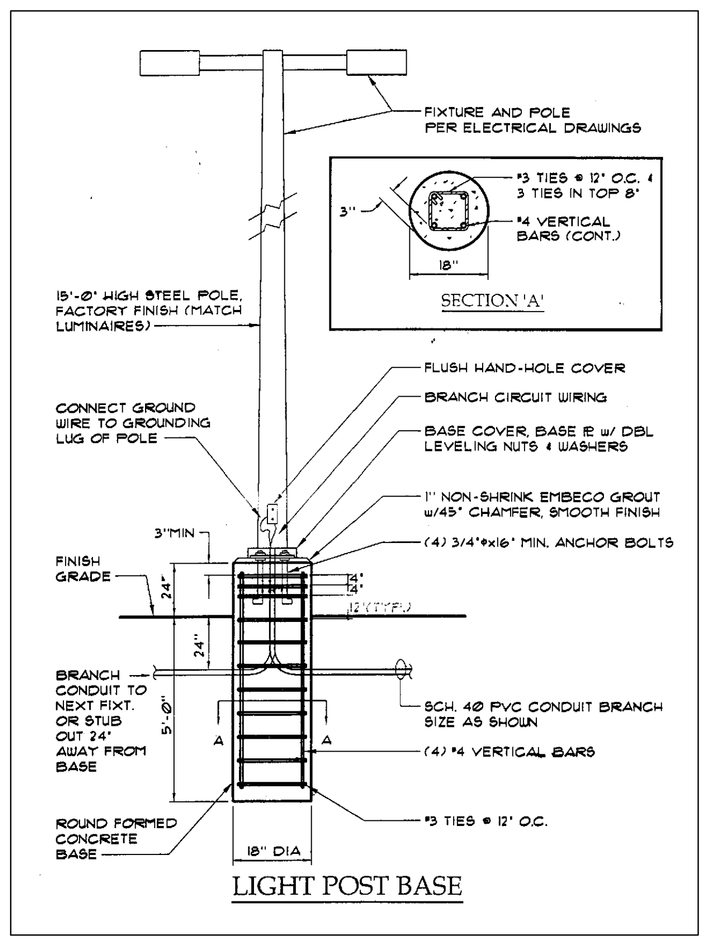

LIGHT POST BASE

SHEET NOTES

1.) APPROXIMATE LOCATION FOR EXISTING PG&E POWER POLE. STUB OUT U.G SECONDARY CONDUIT FOR NEW POWER SERVICE. FIELD VERIFY EXACT LOCATION WITH UTILITY COMPANY ENGINEERS PRIOR TO INSTALLATION. SEE LINE DIAGRAMS.

2.) PROPOSED APPROXIMATE LOCATION FOR NEW PEDESTAL METER MAIN PANEL. PROVIDE UFER GROUND ROD. SEE SINGLE LINE DIAGRAM. FIELD VERIFY EXACT LOCATION WITH UTILITY COMPANY ENGINEERS PRIOR TO INSTALLATION.

3.) PROVIDE POWER CONNECTION FOR IRRIGATION CONTROL PANEL. FIELD VERIFY EXACT LOCATION WITH GENERAL CONTRACTOR PRIOR TO INSTALLATION.

4.) PROVIDE 4"ø BARRIER POLES FOR PANEL PROTECTION (TYP.2). FIELD VERIFY EXACT LOCATION WITH GENERAL CONTRACTOR PRIOR TO INSTALLATION.

5.) PROVIDE LIGHTING CONTROL PANEL FOR ALL EXTERIOR POLE LIGHT FIXTURES CONTROL, NEMA3R, TITLE 24 CERTIFY. SEE DETAIL 6/E-2.

6.) PROVIDE POLE BASE FOR PARKING LOT LIGHT POLE INSTALLATION. PROVIDE U.G WIRING AND ROUTE THRU LIGHTING CONTROL PANEL. FIELD ADJUST REFLECTDR TD CUT OFF GLARE AT PROPERTY LINE AS REQUIRED.

ELECTRICAL NOTES

1. VERIFY EXACT LOCATIONS OF ALL ELECTRICAL EQUIPMENT ON SITE BEFORE STARTING WORK.

2. ELECTRICAL CONTRACTOR SHALL APPRISE HIMSELF OF ALL EXISTING ELECTRICAL CONDITIONS AT SITE PRIOR TO BID.

3. ELECTRICAL CONTRACTOR TO HOOK UP ALL MOTOR CONTROL SYSTEM AS PER MECHANICAL & PLUMBING PLANS.

4. CIRCUIT BREAKERS USED TO SWITCH FLUORESCENT FIXTURES TO BE APPROVED FOR SWITCHING DUTY AND RATED SWD (CEC 240-83d).

5. PROVIDE MINIMUM 36" WORK CLEARANCE IN FRONT AND 30" WIDE WORK SPACE FOR SERVICE / PANEL / EQUIPMENT.

6. ALL EQUIPMENT TO HAVE TESTING LABORATORY LABEL ATTACHED. (UL, OSA, ...) (CEC 110-2).

7. PROVIDE WEATHERPROOF (WP) GROUND FAULT INTERRUPTED (GFI) RECEPTACLE WITHIN 25 FEET OF ALL HVAC UNITS ON ROOF.

8. CROUND ALL ELECTRICAL EQUIPMENT AS PER TITLE 24 AND CALIFORNIA ELECTRICAL CODE (CEC). SECTION 250-50.

9. FLUORESCENT BALLASTS SHALL MEET THE CERTIFICATION REQUIREMENTS OF ARTICLE 2-5314 (A) OF CALIFORNIA ENERGY STANDARDS, TITLE 24.

10. ALL WIRING SHALL BE INSTALLED IN CONDUIT RACEWAY. PVC SCH. 40 CONDUIT BELOW GRADE, EMT CONDUIT CONCEAL IN WALL AND ABOVE CEILING. RIGID STEEL CONDUIT ON EXTERIOR WALL OR ROOF. WIREMOLD #800 PLASTIC RACEWAY ON INTERIOR EXPOSE WALL.

11. THE LOCATION AND ROUTE OF CONDUITS AND RACEWAYS IN ALL ELECTRICAL DRAWINGS IN THESE SET OF DOCUMENT ARE SCHEMATIC. ALL CONDUIT RACEWAYS SHALL BE INSTALLED PARALLEL OR PERPENDICULAR TO THE BUILDING STRUCTURE WITH THE MINIMUM LENGTH AS POSSIBLE.

12. ALL SWITCHES AND OUTLETS MUST BE LOCATED BEIWEEN 15" TO 48" ABOVE FINISH FLOOR IN FRONT REACH AREAS AND 9" TO 54" FOR SIDE REACH AREAS TO PROVIDE REQUIRED ACCESS FOR THE PHYSICALLY DISABLED. [CBC 210-7(g)]

13. SERVICE EQUIPMENT TO BE SUITABLE FOR AVAILABLE SHORT CIRCUIT CURRENT (CEC 230-98).

UNDERGROUND SERVICE ALERT (U.S.A.)

THE LOCATION OF EXISTING UNDERGROUND UTILITIES WERE TAKEN FORM SOURCES BELIEVED TO BE RELIABLE. HOWEVER, THEY HAT NOT BEEN INDEPENDENTLY VERIFIED BY THE OWNER OR INIs ENGINEER. THE CONTRACTORS SHALL DETERMINE THE EXACT LDCARON OF ALL EXISTING UTILIBES BEFORE COMMENCING WORK. AND AGREES TO BE FULLY RESPONSIBLE FOR ANY AND ALL DAMAGES WHICH MIGHT BE OCCASIONED BY THE CONTRACTOR'S FAILURE TO EXACTLY LOCATE AND PRESERVE ANY AND ALL UNDERGRDUND URLI1ES.

ELECTRICAL NOTES

1. ELECTRICAL CONTRACTOR TO COORDINATE LOCATION OF EASEMENTS, UNDERGROUND UTILITIES & DRAINAGE PRIOR DRILLING FOR POLE BASES INSTALLATION.

2. ALL DUTDOOR LIGHTING BRANCH CIRCUIT SHALL BE AWG. 10 CU AND VIA EXTERIOR LIGHTING CONTROL PANEL. SEE LIGHTING CONTROL DETAIL.

3.THE LAYOUT FOR THE POWER AND TELEPHONE UNDERGROUND SERVICE IN THIS DRAWING 15 ONLY FOR PLAN CHECK PURPOSE, AND HAS NOT BEEN APPROVAL BY THE UTILITY COMPANIES. IT IS THE RESPONSIBILITY FOR THE ELECTRICAL CONTRACTOR TO CONTACT THE UTILITY COMPANIES AND TO REVIEW THE APPROVAL CONSTRUCTION DRAWINGS PRIOR TO SUBMITTING THE BID.

CODE RULES AND REGULATIONS

ALL WORK AND MATERIAL SHALL BE IN FULL ACCORDANCE WITH THE LATEST RULES AND REGULATIONS OF THE STATE FIRE MARSHAL, THE CALIFORNIA ELECTRICAL CODE; THE SAFETY ORDERS OF THE DIVSIoN OF INDUSTRIAL SAFETY AND OTHER APPLICABLE STATE LAWS OR REGULATIONS. NOTHING IN THESE PLANS OR SPECIFICATIONS IS TO BE CONSTRUED TO PERMIT WORK NOT CONFORMING TO THESE CODES.
2007 CALIFORNIA ELECTRIC CODE (CEC).
2007 CALIFORNIA FIRE CDDE (CFC).
2007 CALIFORNIA ENERGY CODE TITLE 24.
CURRENT CITY ORDINANCES AND REGULATIONS
CURRENT TITLE 19 (CCR). PUBLIC SAFTEY, STATE FIRE MARCHAL REGULATIONS.

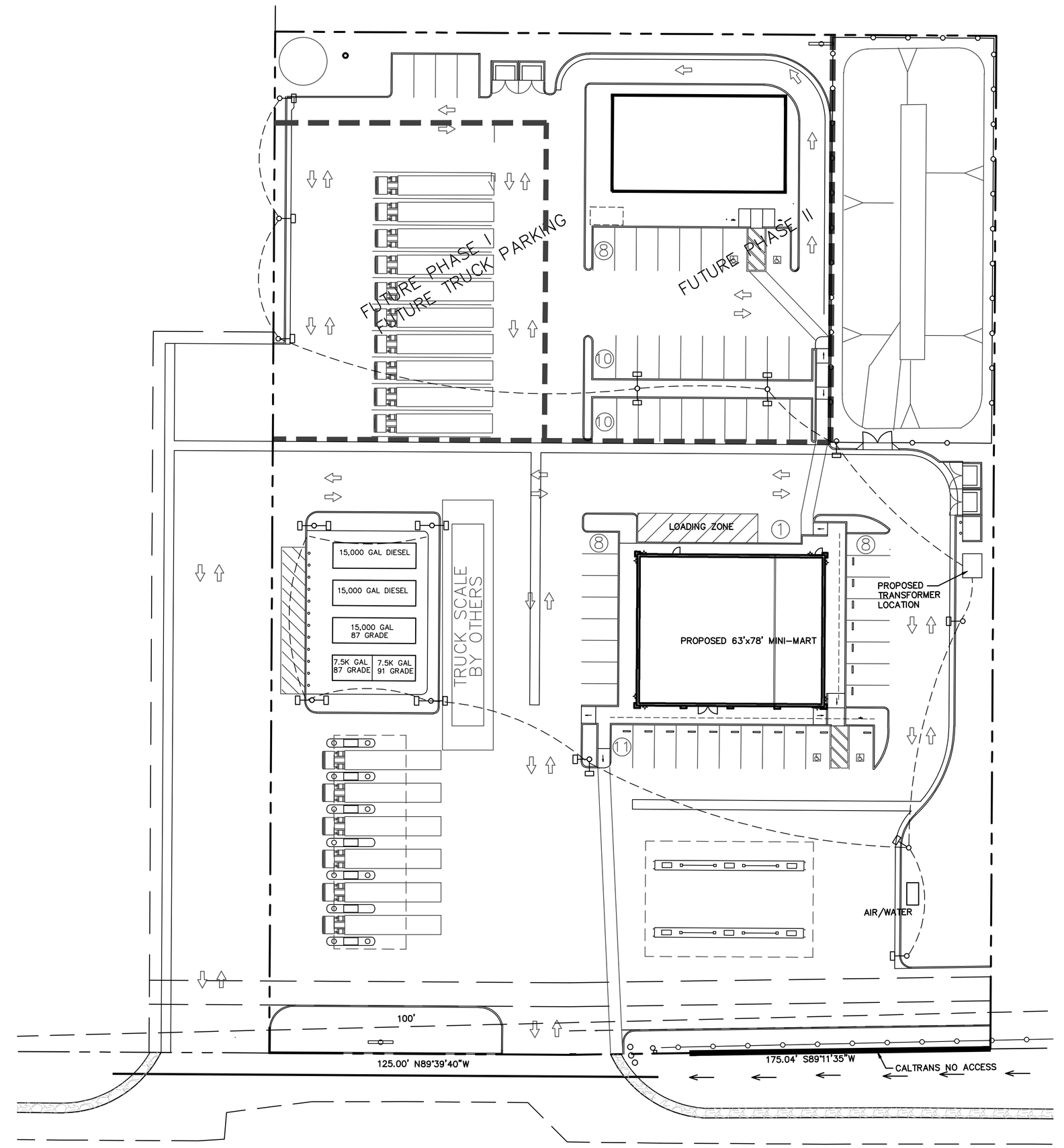

NORTH

SCALE 1' = 30'

PRINCE TRUCK STOP ON-SITE LIGHTS

CITY OF BAKERSFIELD,
KERN COUNTY, CALIFORNIA
PD PLAN #2, MAP #203
SHEET 6 OF 12 SHEETS

PLOT DATE: 6-21-11 JOB. NO. : 09-208

This and all other project documents and all ideas, aesthetics and designs incorporated therein are instruments of service. All project documents are the registered property of Harbison International (HI) and cannot be lawfully used in whole or in part for any project or purpose not specifically authorized in writing and prepared by HI. Unauthorized use hereby gives formal notice that any such project document use, reproduction, or modification (whether or not any material will be sold) automatically binds all parties involved with misuse to liability agreement of $1,000 per occurrence for damages, attorney's fees, court costs, and all losses, demands, claims or liabilities arising directly or indirectly from project document misuse.

Project documents describe design intent of work and are not a representation of the as-built or existing conditions. HI and HI's consultants make no representations as to the accuracy of information shown and are not responsible for any discrepancies between project documents and the existing conditions.

REGISTERED PROFESSIONAL ENGINEER MARK H. WILKINSON No. 23273 Exp. 12-31-11 CIVIL STATE OF CALIFORNIA

HARBISON INTERNATIONAL INC.,
ENGINEERS - SURVEYORS - PLANNERS
2755 E. SHAW AVE., SUITE 101, FRESNO, CA 93710
PHONE: (559) 294-7485 FAX: (559) 294-7481

PRINCE TRUCK STOP
BAKERSFIELD, CALIFORNIA

REVISIONS
No. Date Desc.

Drawn: JMM
Checked: MAH
Approved: M. A. HAMZY
Project No. 09-208
Date: 6-21-11

Title: LIGHT PLAN

Sheet No. C-6 OF 12 SHEETS

BMP (BEST MANAGEMENT PRACTICES) LIST

THE FOLLOWING BMPS AS OUTLINED IN, BUT NOT LIMITED TO, THE CALIFORNIA STORMWATER BMP HANDBOOK, OR THE LATEST REVISED EDITION, MAY APPLY DURING THE CONSTRUCTION OF THIS PROJECT (ADDITIONAL MEASURES MAY BE REQUIRED IF DEEMED APPROPRIATE BY COUNTY INSPECTORS): SEE SITE SPECIFIC S.W.P.P.P. BOOKS 1 AND 2 FOR ADDED DETAILS.

EROSION CONTROL

EC1 – SCHEDULING
EC2 – PRESERVATION OF EXISTING VEGETATION
EC3 – HYDRAULIC MULCH
EC4 – HYDROSEEDING
EC5 – SOIL BINDERS
EC6 – STRAW MULCH
EC7 – GEOTEXTILES & MATS
EC8 – WOOD MULCHING
EC9 – EARTH DIKES AND DRAINAGE SWALES
EC10 – VELOCITY DISSIPATION DEVICES
EC11 – SLOPE DRAINS
EC12 – STREAMBANK STABILIZATION
EC13 – POLYACRYLAMIDE

TEMPORARY SEDIMENT CONTROL

SE1 – SILT FENCE
SE2 – SEDIMENT BASIN
SE3 – SEDIMENT TRAP
SE4 – CHECK DAM
SE5 – FIBER ROLLS
SE6 – GRAVEL BAG BERMS MU
SE7 – STREET SWEEPING AND VACUUMING
SE8 – SANDBAG BARRIER
SE9 – STRAW BALE BARRIER
SE10 – STORM DRAIN INLET PROTECTION

SEDIMENT CONTROL BMP'S

SE–1 – SILT FENCE
SE–5 – FIBER ROLLS
SE–7 – STREET SWEEPING AND VACUUMING
SE–8 – SAND BAG BARRIER
SE–9 – STRAW BALE BARRIER
SE–10 – STORM DRAIN INLET PROTECTION

WIND EROSION CONTROL BMP'S

WE–1 – WIND EROSION CONTROL

TRACKING CONTROL

TC1 – STABILIZED CONSTRUCTION ENTRANCE EXIT

NON–STORMWATER MANAGEMENT

NS1 – WATER CONSERVATION PRACTICES
NS2 – DEWATERING OPERATIONS
NS3 – PAVING AND GRINDING OPERATIONS
NS6 – ILLICIT CONNECTION/DISCHARGE
NS7 – POTABLE WATER/IRRIGATION
NS9 – VEHICLE AND EQUIPMENT FUELING
NS12 – CONCRETE CURING
NS13 – CONCRETE FINISHING

WASTE MANAGEMENT & MATERIAL POLLUTION CONTROL

WM1 – MATERIAL DELIVERY AND STORAGE
WM2 – MATERIAL USE
WM3 – STOCKPILE MANAGEMENT
WM4 – SPILL PREVENTION AND CONTROL
WM5 – SOLID WASTE MANAGEMENT
WM6 – HAZARDOUS WASTE MANAGEMENT
WM7 – CONTAMINATION SOIL MANAGEMENT
WM8 – CONCRETE WASTE MANAGEMENT
WM9 – SANITARY/SEPTIC WASTE MANAGEMENT
WM10 – LIQUID WASTE MANAGEMENT

KEY NOTES (0.0)

2.1 POTENTIAL LOCATION FOR A 30' x 50' x 12" THICK (3" TO 6" COARSE VARIABLE SIZE AGGREGATE) STABILIZED CONSTRUCTION ENTRANCE PER DETAIL 3, THIS SHEET. CONSTRUCTION ENTRANCE THROUGH THIS AREA. (AND TC–1)
2.2 INSTALL GRAVEL SEDIMENT FILTER PER DETAIL 4.
2.3 INSTALL REMOVABLE STRAW BALES SIMILAR TO DETAIL 2, THIS SHEET.
2.4 POTENTIAL WASTE MANAGEMENT/REFUSE BIN LOCATION. (AND WM–5).
2.5 POTENTIAL LOCATION FOR MATERIAL STORAGE. (WM–1).
2.6 FOR SITE PERIMETER, INSTALL SILT FENCE AS PER DETAIL ON THIS SHEET
2.7 PORTABLE TOILETS MUST BE LOCATED TWENTY FEET (20') FROM DRAIN INLETS, PAVED SURFACES, AND CONCRETE AREAS. (WM–9).
2.8 POTENTIAL LOCATION FOR 20' X 30' CONCRETE WASHDOWN AREA, PER WM–8. SEE DETAIL 6, THIS SHEET.
2.9 INSTALL STRAW BALE AS SHOWN

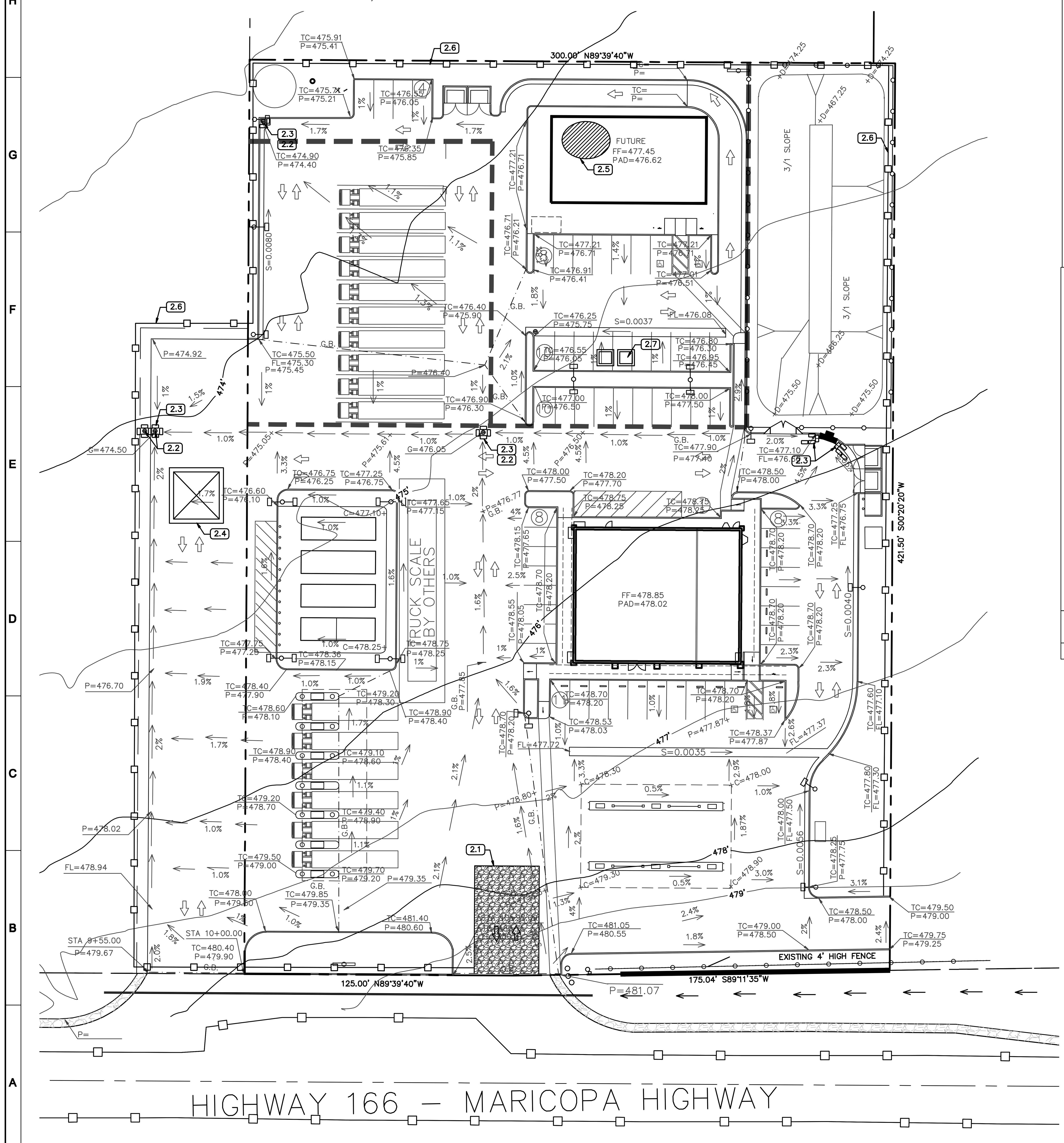

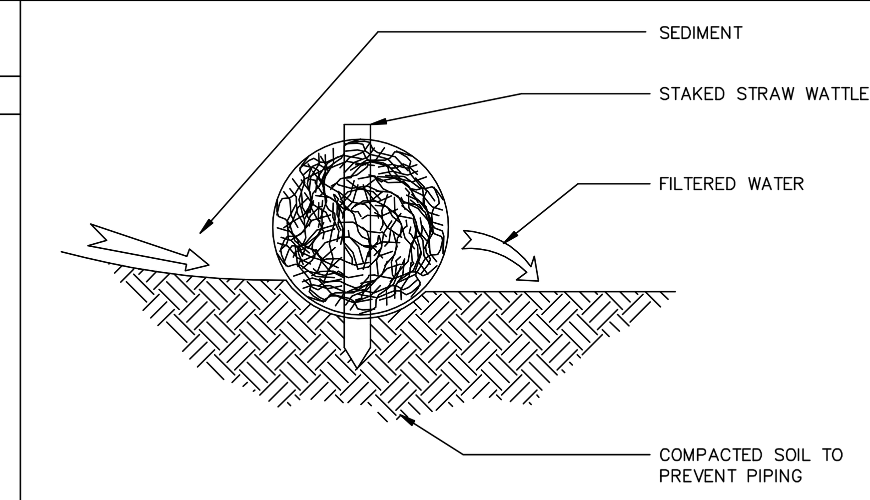

1 STRAW WATTLE INSTALLATION

NO SCALE

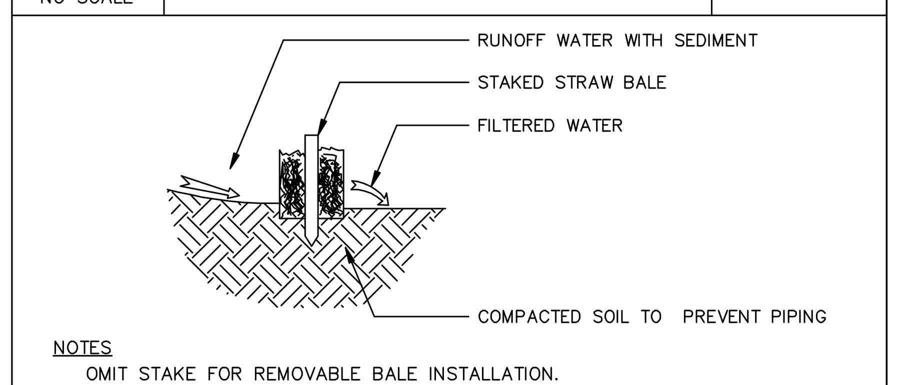

NOTES
OMIT STAKE FOR REMOVABLE BALE INSTALLATION.

2 STRAW BALE INSTALLATION

NO SCALE

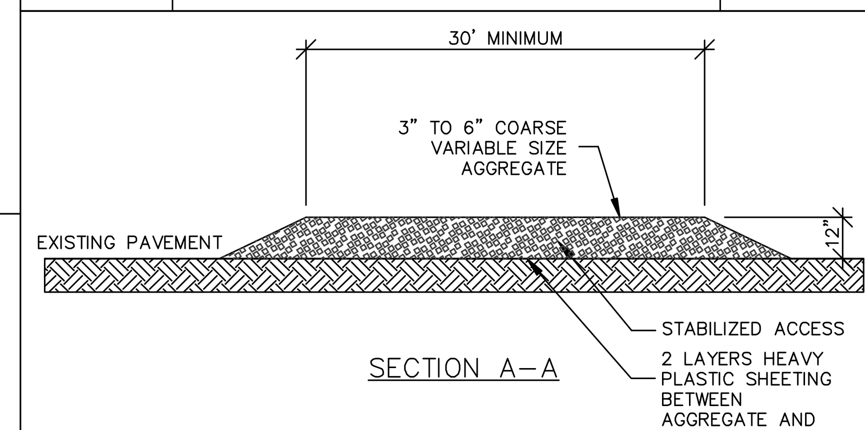

NOTES

STABILIZED CONSTRUCTION SITE ACCESS SHALL BE CONSTRUCTED OF CLEAN ANGULAR ROCK MATERIAL CONFORMING TO STATE SPECIFICATIONS. MATERIAL SHALL BE PLACED TO A MINIMUM THICKNESS OF TWELVE INCHES. THE METHOD OF PLACING, SPREADING AND COMPACTING ANGULAR ROCK MATERIAL SHALL CONFORM TO THE STATE SPECIFICATIONS.

THE SITE ACCESS SHALL BE KEPT IN GOOD CONDITION BY OCCASIONAL TOP DRESSING WITH NEW MATERIAL OR CLEANED AS DIRECTED BY THE CITY.

3 STABILIZED ENTRANCE

NO SCALE

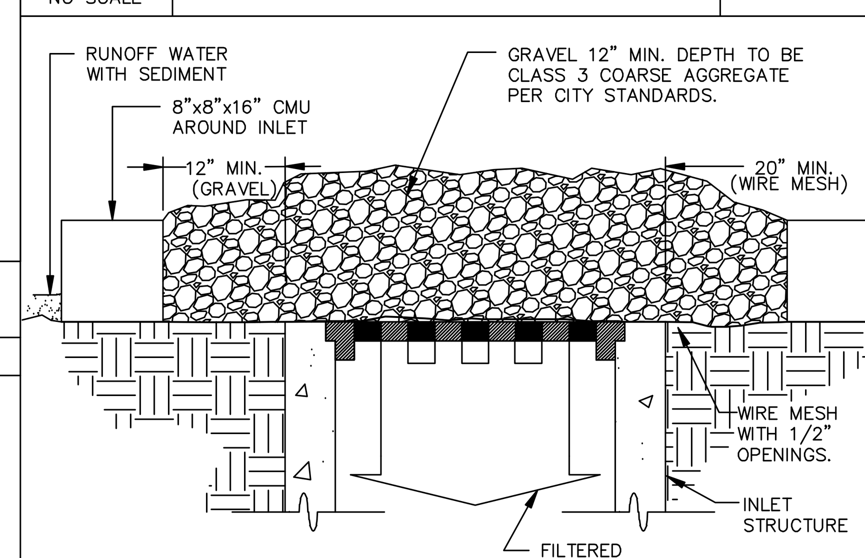

4 GRAVEL & WIRE MESH D.I. SEDIMENT FILTER

NO SCALE

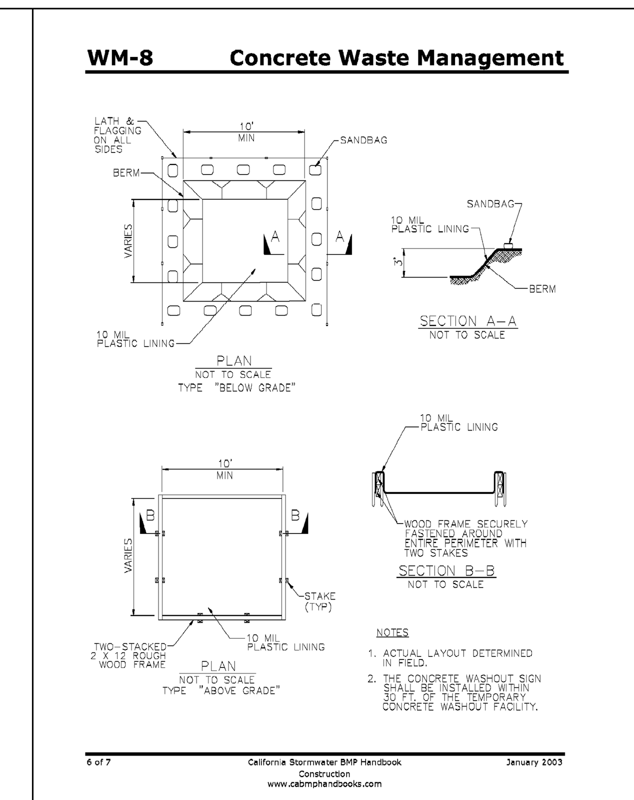

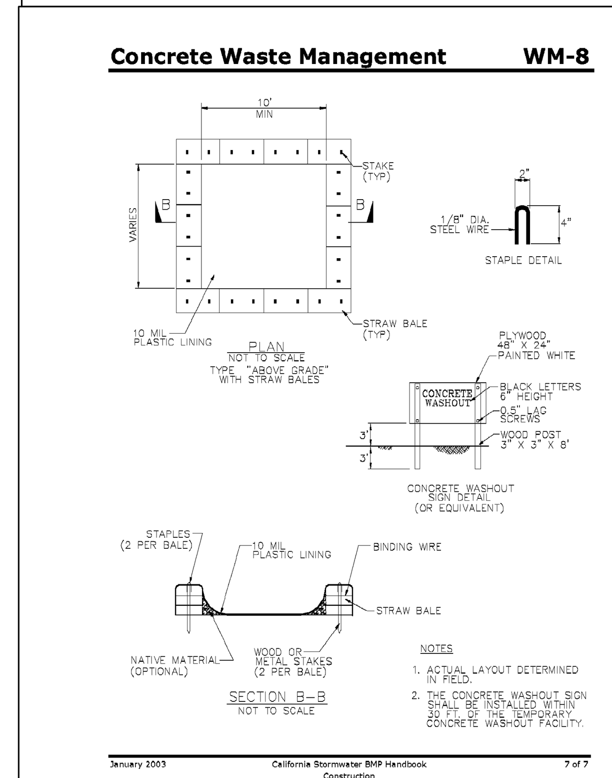

6 WASH-DOWN AREA

NO SCALE

LEGEND

STORM DRAIN INLET WITH SEDIMENT FILTER (SEE DETAIL 1)
DIRECTION OF SHEET FLOW
STRAW BALE
REMOVABLE STRAW BALE
FIBER ROLLS
P — PORTABLE TOILET
W.M. — WASTE MANAGEMENT BIN
M.S. — MATERIAL STORAGE AREA
MATERIAL STORAGE AREA
STABILIZED ENTRANCE

EROSION CONTROL NOTES

1. EROSION CONTROL IS REQUIRED FOR GRADING OPERATION DURING THE RAINY SEASON / OR LOCAL REQUIREMENT.
2. THE CONTRACTOR SHALL PROVIDE EQUIPMENT AND MANPOWER FOR EMERGENCY WORK AT ALL TIMES DURING THE RAINY SEASON. NECESSARY MATERIALS SHALL BE AVAILABLE ON SITE AND STOCKPILED AT CONVENIENT LOCATIONS TO FACILITATE RAPID CONSTRUCTION OF TEMPORARY DEVICES WHEN RAIN IS IMMINENT.
3. ALL REMOVABLE EROSION CONTROL MEASURES SHOWN SHALL BE IN PLACE AT THE END OF EACH WORKING DAY WHEN THE FIVE (5) DAY RAIN PROBABILITY FORECAST EXCEEDS 40%.
4. AFTER A RAINSTORM, ALL SILT AND DEBRIS SHALL BE REMOVED FROM CHECK BERMS, SILT FENCES AND DE–SILTING BASINS.
5. INFORMATION SHOWN ON THIS PLAN IS FOR EROSION CONTROL ONLY. ALL OTHER CONSTRUCTION INFORMATION IS SUBJECT TO CHANGE.
6. CONFORMANCE WITH THE REQUIREMENTS OF THIS PLAN SHALL IN NO WAY RELIEVE THE CONTRACTOR OF HIS RESPONSIBILITIES TO PROTECT THIS SITE AND ADJACENT PROPERTIES DURING INCLEMENT WEATHER. TEMPORARY EROSION CONTROL SHALL CONSIST OF, BUT NOT BE LIMITED TO, CONSTRUCTING SUCH FACILITIES AND TAKING ALL NECESSARY MEASURES AS MAY BE REQUIRED TO PREVENT, CONTROL AND ABATE WATER, SILT, MUD AND EROSION DAMAGE TO PUBLIC AND PRIVATE PROPERTY AS A RESULT OF THE CONSTRUCTION OF THIS PROJECT.
7. FILL AREAS, WHILE BEING BROUGHT UP TO GRADE AND PRIOR TO FINAL GRADE, SHALL BE PROTECTED TO ELIMINATE EROSION AND PREVENT THE SILTATION OF DOWNSTREAM FACILITIES. THESE MEASURES MAY INCLUDE, BUT SHALL NOT BE LIMITED TO: TEMPORARY DOWN–DRAINS, EITHER IN THE FORM OF PIPES OR PAVED DITCHES WHICH PROTECT CUT–FILL AREAS; GRADED BERMS AROUND AREAS TO ELIMINATE EROSION OF FILL SLOPES; INSTALLATION OF SAND BAGS OR STRAW BALES AROUND INLET STRUCTURES SHALL BE CONSTRUCTED AND MAINTAINED ON THOSE AREAS WHERE EARTHWORK OPERATIONS ARE IN PROGRESS OR SUSCEPTIBLE TO EROSION.
8. AGENCY APPROVAL OF PLANS DOES NOT RELIEVE THE CONTRACTOR FROM RESPONSIBILITY FOR THE CORRECTION OF ERRORS AND/OR OMISSIONS DISCOVERED DURING CONSTRUCTION.
9. EROSION CONTROL SYSTEMS SHALL BE SERVICED AND MAINTAINED TO PROVIDE CONTINUOUS CAPACITY AND ADEQUACY TO FUNCTION AS DESIGNED. AFTER PRECIPITATION EXCEEDING ONE–QUARTER (1/4) INCH IN ANY 12–HOUR PERIOD, OR UPON DIRECTION OF THE CITY. SILT AND DEBRIS SHALL BE REMOVED FROM CHECK DAMS AND DESILTING BASINS AND THE BASINS PUMPED DRY AND OTHERWISE RESTORED TO THE ORIGINAL DESIGN CONDITION.
10. EROSION CONTROL PROVISIONS SHALL INCLUDE AND COMPLEMENT DRAINAGE PATTERNS DURING THE CURRENT AND FUTURE PHASES OF GRADING THROUGHOUT THE RAINY SEASON.
11. ALL UTILITY TRENCHES SHALL BE BACKFILLED WITHIN 24 HOURS AND MUST BE BACKFILLED BEFORE THE END OF THE WORK DAY IF A 40 PERCENT CHANCE OF RAIN IS PREDICTED.

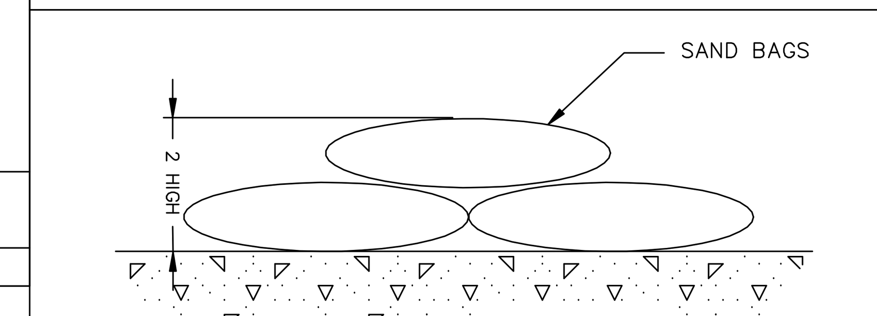

5 GRAVEL BAG INSTALLATION

NO SCALE

PREPARED FOR

MR. DALJINDER S. CHAUHAN
PRINCE PROPERTIES
2300 PANAMA LANE
BAKERSFIELD, CA. 93307

BASIS OF ELEVATION

DESIGNATION – B 1209
PID – FU0236
STATE/COUNTY – CA/KERN
USGS QUAD – METTLER (1982)

ELEVATION= 525.0

APN

APN: 238–203–07

NORTH

SCALE: 1" = 30'

30' 15' 0' 30'

STORM WATER POLLUTION PREVENTION PLAN PRINCE TRUCK STOP

CITY OF BAKERSFIELD,
KERN COUNTY, CALIFORNIA
PD PLAN #2, MAP #203
SHEET 7 OF 12

This and all other project documents and all ideas, aesthetics and designs incorporated therein are instruments of service. All project documents are the registered property of Harbison International (HI) and cannot be lawfully used in whole or in part for any project or purpose except as described in the contractual agreement between HI and the Client. HI hereby gives formal notice that any such project document use, reproduction, or modification (misuse) is not only unlawful but also automatically binds all parties involved with misuse to fully indemnify and defend HI and HI's consultants to the maximum legal extent against all losses, demands, claims or liabilities arising directly or indirectly from project document misuse.

Project documents describe design intent of work and are not a representation of the as–built or existing conditions. HI and HI's consultants make no representations concerning the accuracy of documents and are not responsible for any discrepancies between project documents and the existing conditions.

REGISTERED PROFESSIONAL ENGINEER — DALE H WINN — No. 23273 — Exp. 12–31–11 — CIVIL — STATE OF CALIFORNIA

HARBISON INTERNATIONAL INC.,
ENGINEERS – SURVEYORS – PLANNERS
2755 E. SHAW AVE., SUITE 101, FRESNO, CA 93710
PHONE: (559) 294–7485 FAX: (559) 294–7481

PROPOSED GAS STATION & TRUCK STOP

BAKERSFIELD, CALIFORNIA

REVISIONS

No.	Date	Desc.

Drawn: JMM
Checked: MAH
Approved: M. A. HAMZY
Project No.
Date: 6–21–11
Title: SWPPP
Sheet No. C–7 OF 12 SHEETS

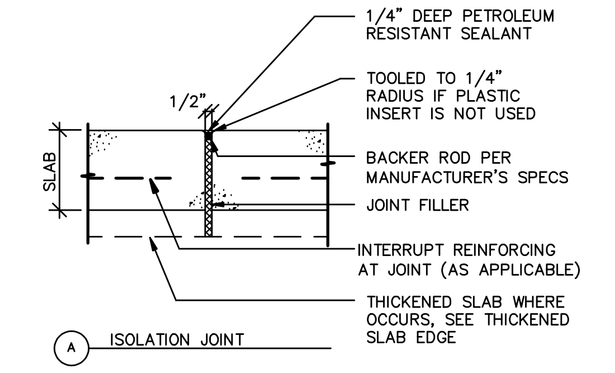

A ISOLATION JOINT

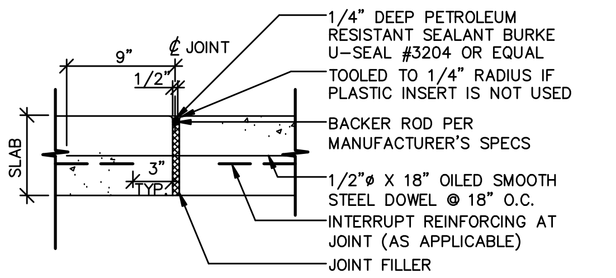

B EXPANSION JOINT @ NEW SLAB

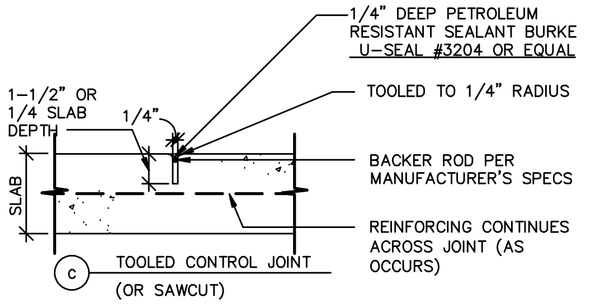

C TOOLED CONTROL JOINT (OR SAWCUT)

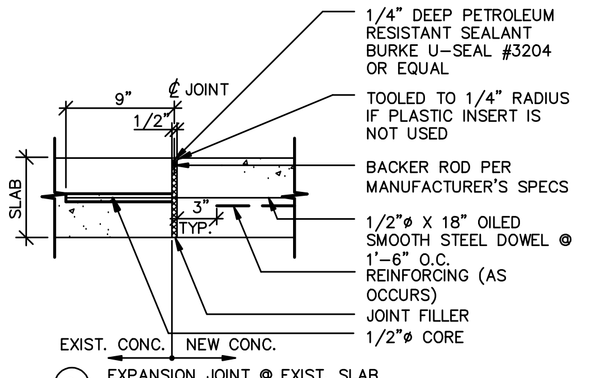

D EXPANSION JOINT @ EXIST. SLAB

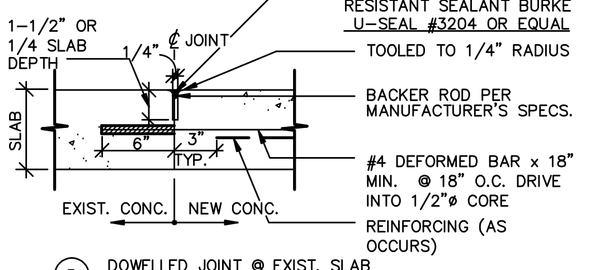

E DOWELLED JOINT @ EXIST. SLAB

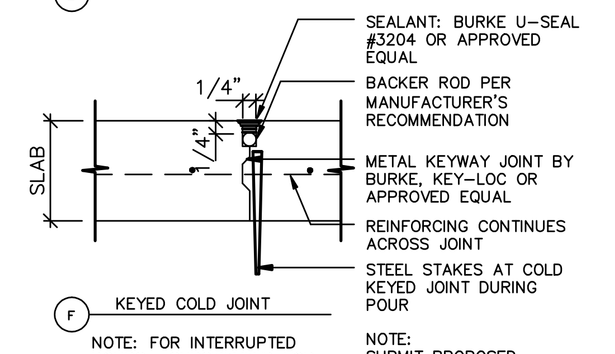

F KEYED COLD JOINT

NOTE: FOR INTERRUPTED POURS, SUBSTITUTED FOR CONTROL JOINT

NOTE: SUBMIT PROPOSED ALTERNATE TO ENGINEER FOR APPROVAL

1 CONCRETE JOINTS

NO SCALE

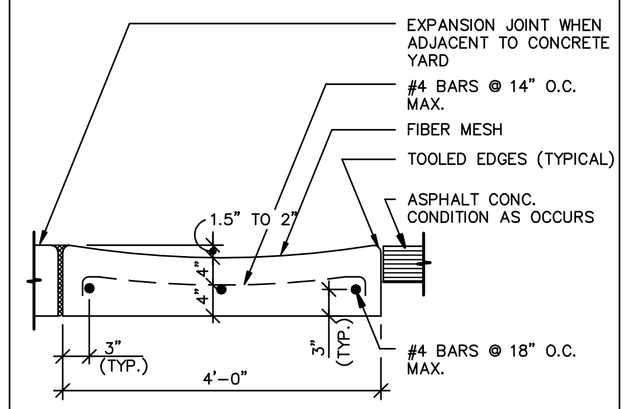

NOTE:
EXPANSION JOINTS @ 40'-0" O.C. MAX. CONTROL JOINTS @ 10'-0" O.C. MAX. WHEN ADJACENT TO CONCRETE YARD CONTINUE JOINTS THROUGH SWALE.

2 CONCRETE SWALE / VALLEY GUTTER

NO SCALE

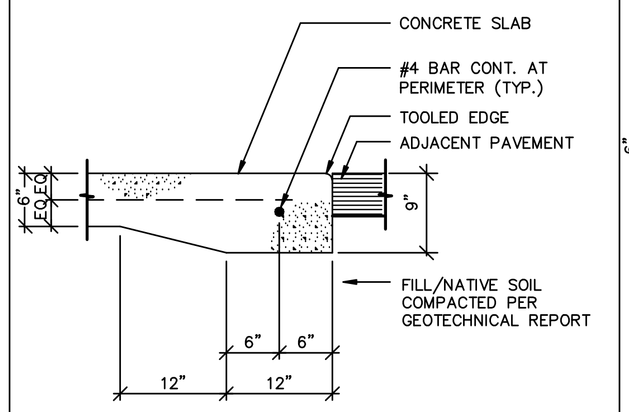

3 CONCRETE SLAB EDGE

NO SCALE

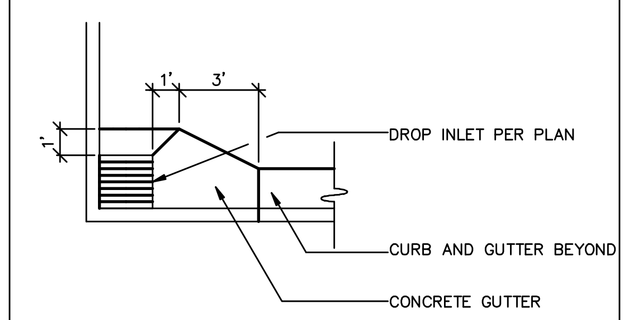

4 CONCRETE GUTTER FLARE

NO SCALE

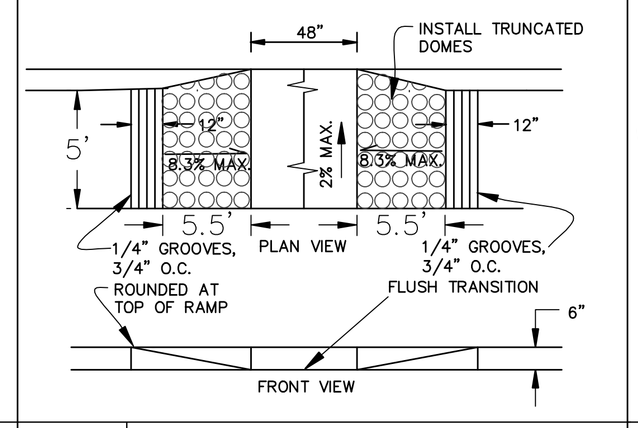

5 MODIFIED HANDICAP RAMP

NO SCALE

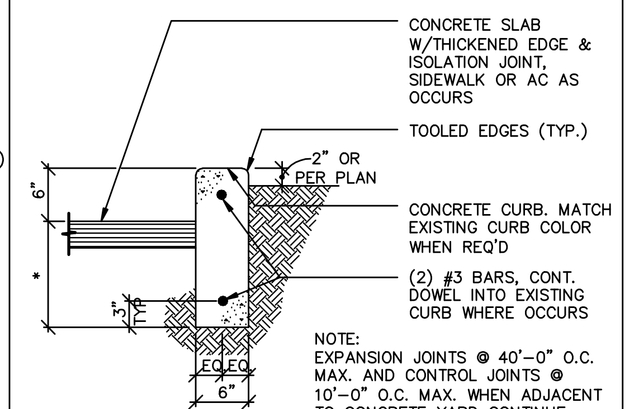

NOTE:
EXPANSION JOINTS @ 40'-0" O.C. MAX. AND CONTROL JOINTS @ 10'-0" O.C. MAX. WHEN ADJACENT TO CONCRETE YARD CONTINUE JOINTS THROUGH CURB.

* DEPTH IS 2" BELOW AGGREGATE BASE OR 12" WHICH EVER IS GREATER

6 CONCRETE CURB

NO SCALE

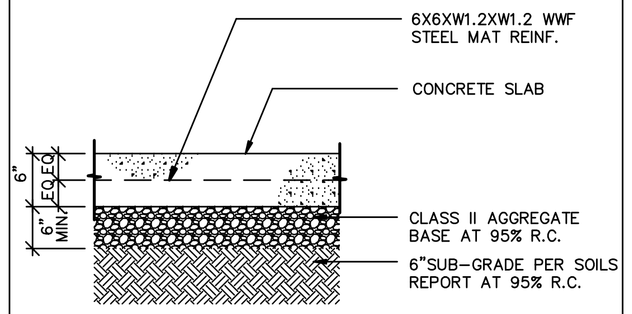

NOTES:

1. PAVING SECTIONS BASED ON SOILS REPORT. SAID REPORT SHALL BE CONSIDERED A PART OF THESE PLANS.

2. ALL GRADING SHALL BE PERFORMED IN ACCORDANCE WITH SOILS REPORT BY TECHNICON ENGINEERING SERVICES, INC., PROJ. NO. 012-06018, MARCH 6, 2008 OR RITE AID SPECIFICATIONS.

7 CONCRETE PAVING SECTION

NO SCALE

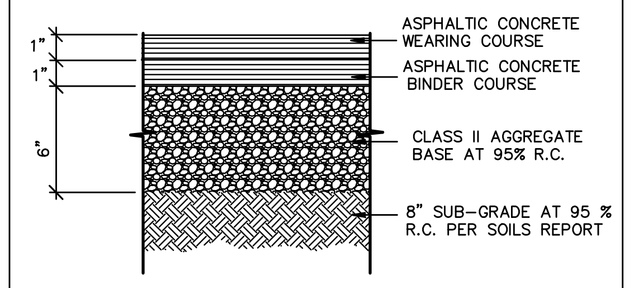

NOTES:

1. PAVING SECTIONS BASED ON SOILS REPORT. SAID REPORT SHALL BE CONSIDERED A PART OF THESE PLANS.

2. ALL GRADING SHALL BE PERFORMED IN ACCORDANCE WITH SOILS REPORT BY CENTRAL VALLEY TESTING, INC., PROJ. NO. 10-0002, JANUARY 13, 2010.

8 A.C. PAVING SECTION (LIGHT) PER SOILS REPORT

NO SCALE

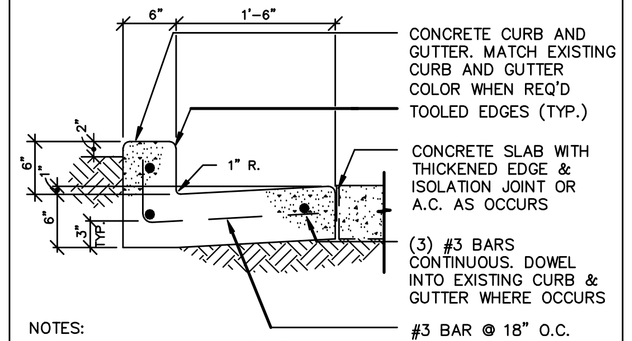

NOTES:
1. EXPANSION JOINTS @ 40'-0" O.C. MAX. &
2. CONTROL JOINTS @ 10'-0" O.C. MAX.
3. WHEN ADJACENT TO CONCRETE SLAB CONTINUE JOINTS THROUGH CURB & GUTTER

9 CURB AND GUTTER

NO SCALE

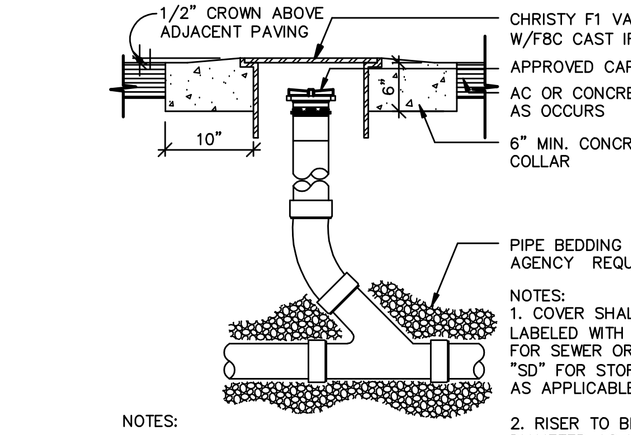

NOTES:
CHRISTY PH. # (800) 486-7070

10 CLEANOUT TO GRADE

NO SCALE

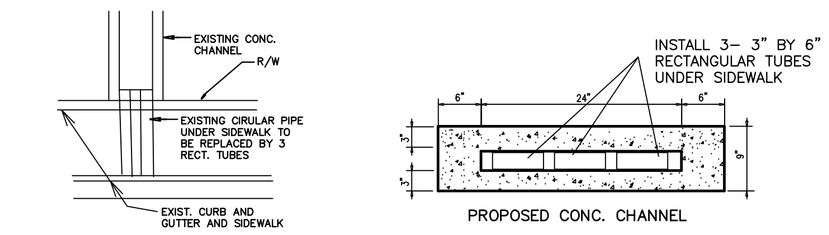

11 CONCRETE CHANNEL THRU PARKING CURB

NO SCALE

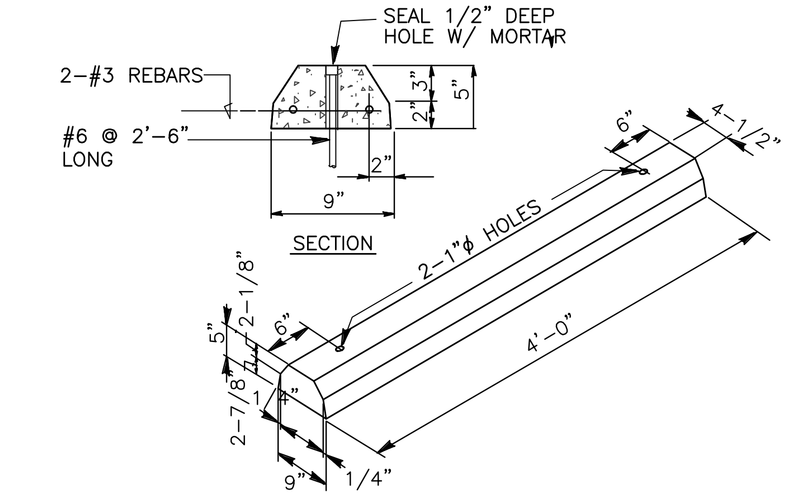

12 PRECAST CONCRETE WHEEL STOP

NO SCALE

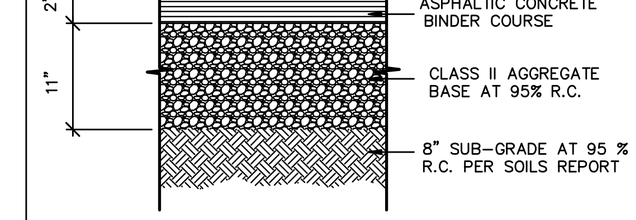

NOTES:

1. PAVING SECTIONS BASED ON SOILS REPORT. SAID REPORT SHALL BE CONSIDERED A PART OF THESE PLANS.

2. ALL GRADING SHALL BE PERFORMED IN ACCORDANCE WITH SOILS REPORT BY CENTRAL VALLEY TESTING, INC., PROJ. NO. 10-0002, JANUARY 13, 2010.

13 A.C. PAVING SECTION (HEAVY) PER SOILS REPORT

NO SCALE

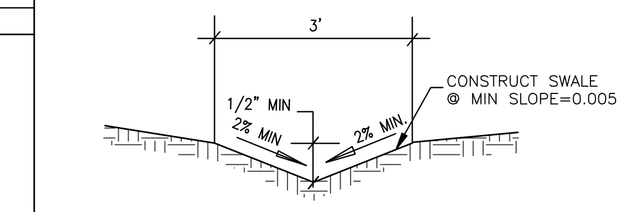

14 GRASS SWALE DETAIL

NO SCALE

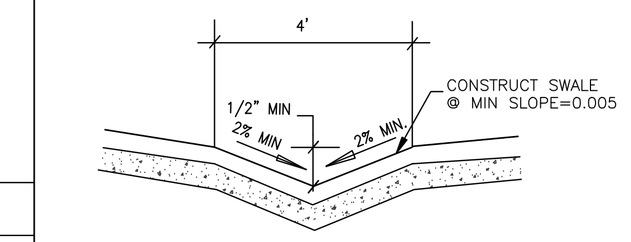

15 AC SWALE DETAIL

NO SCALE

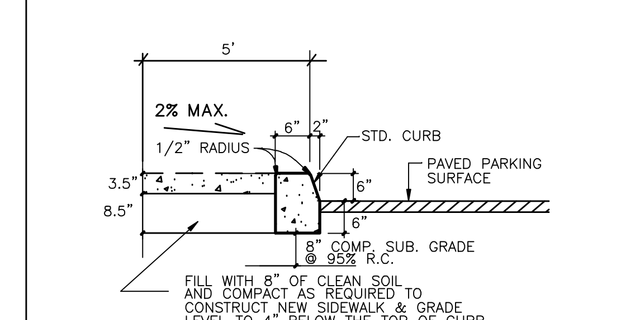

16 TYPICAL CONC. CURB + SIDEWALK

NO SCALE

DETAIL SHEET
PRINCE TRUCK STOP

CITY OF BAKERSFIELD,
KERN COUNTY, CALIFORNIA
PD PLAN #2, MAP #203
SHEET 8 OF 12

This and all other project documents and all ideas, aesthetics and designs incorporated herein are instruments of service and shall remain the property of Harbison International (HI) and cannot be lawfully used in whole or in part for any project or purpose except as described in the contractual agreement between HI and the Client. HI shall retain all common law, statutory and other reserved rights, including the copyright thereto. Client's acceptance of HI's documents shall constitute agreement that no reproduction (release) is ever only unlawful but also automatically binds all parties involved with misuse to fully indemnify and defend HI and HI's consultants to the maximum legal extent against all claims, lawsuits, losses or liabilities arising directly or indirectly from project document misuse. Project documents include design intent, HI work and are not a representation of the finished project. HI is not responsible for any changes made to these documents by others concerning the accuracy of documents and are not responsible for any discrepancies between project documents and the existing conditions.

HARBISON INTERNATIONAL INC.,
ENGINEERS - SURVEYORS - PLANNERS
2755 E. SHAW AVE., SUITE 101, FRESNO, CA 93710
PHONE: (559) 294-7485 FAX: (559) 294-7481

REGISTERED PROFESSIONAL ENGINEER — MATTHEW A. HAMZY — No. 23273 — Exp. 12-31-11 — CIVIL — STATE OF CALIFORNIA

PRINCE TRUCK STOP
BAKERSFIELD, CALIFORNIA

REVISIONS
No. Date Desc.

Drawn: JMM
Checked: MAH
Approved: M. A. HAMZY

Project No.
Date: 6-21-11

Title
DETAIL SHEET

Sheet No.
C-8
OF 12 SHEETS

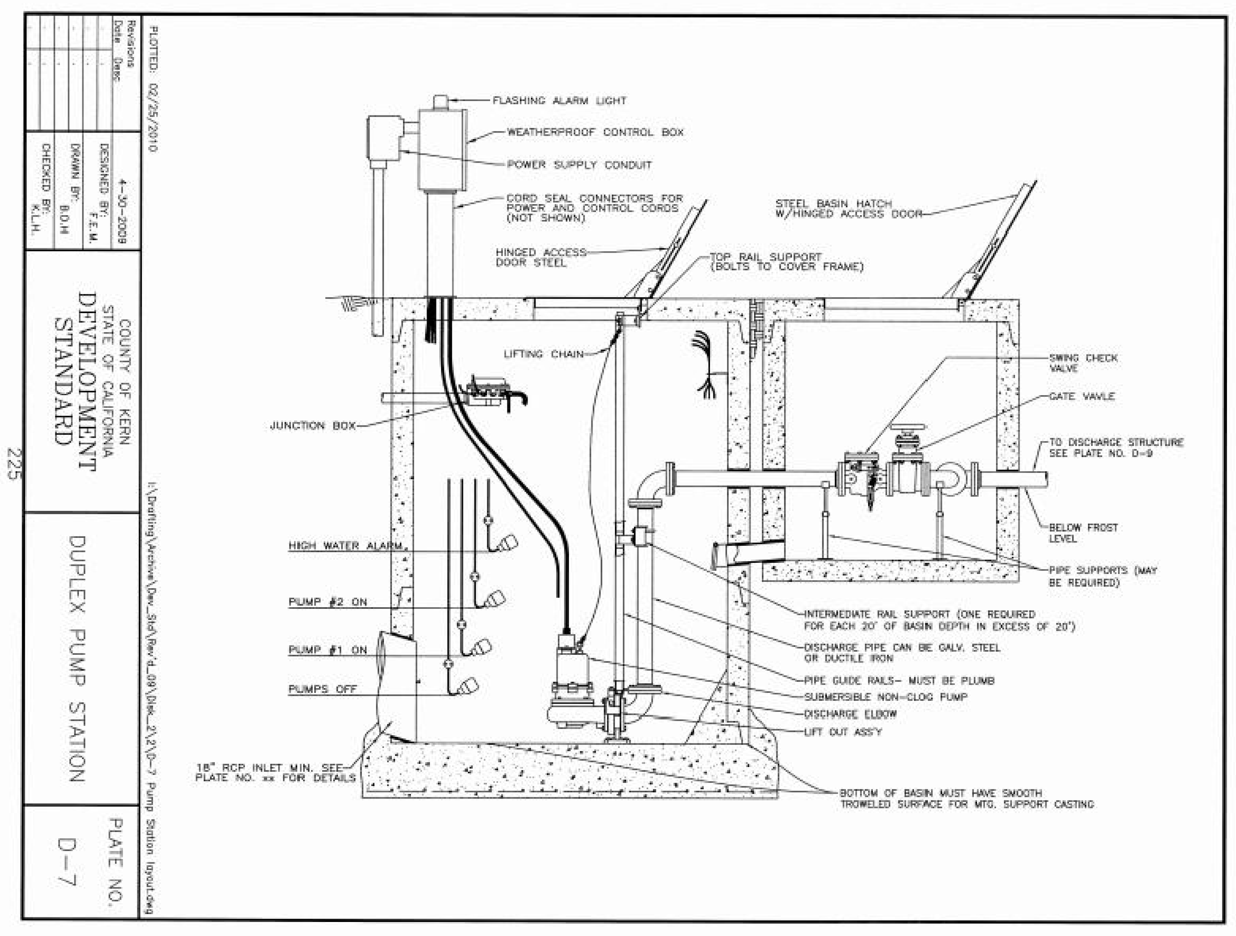

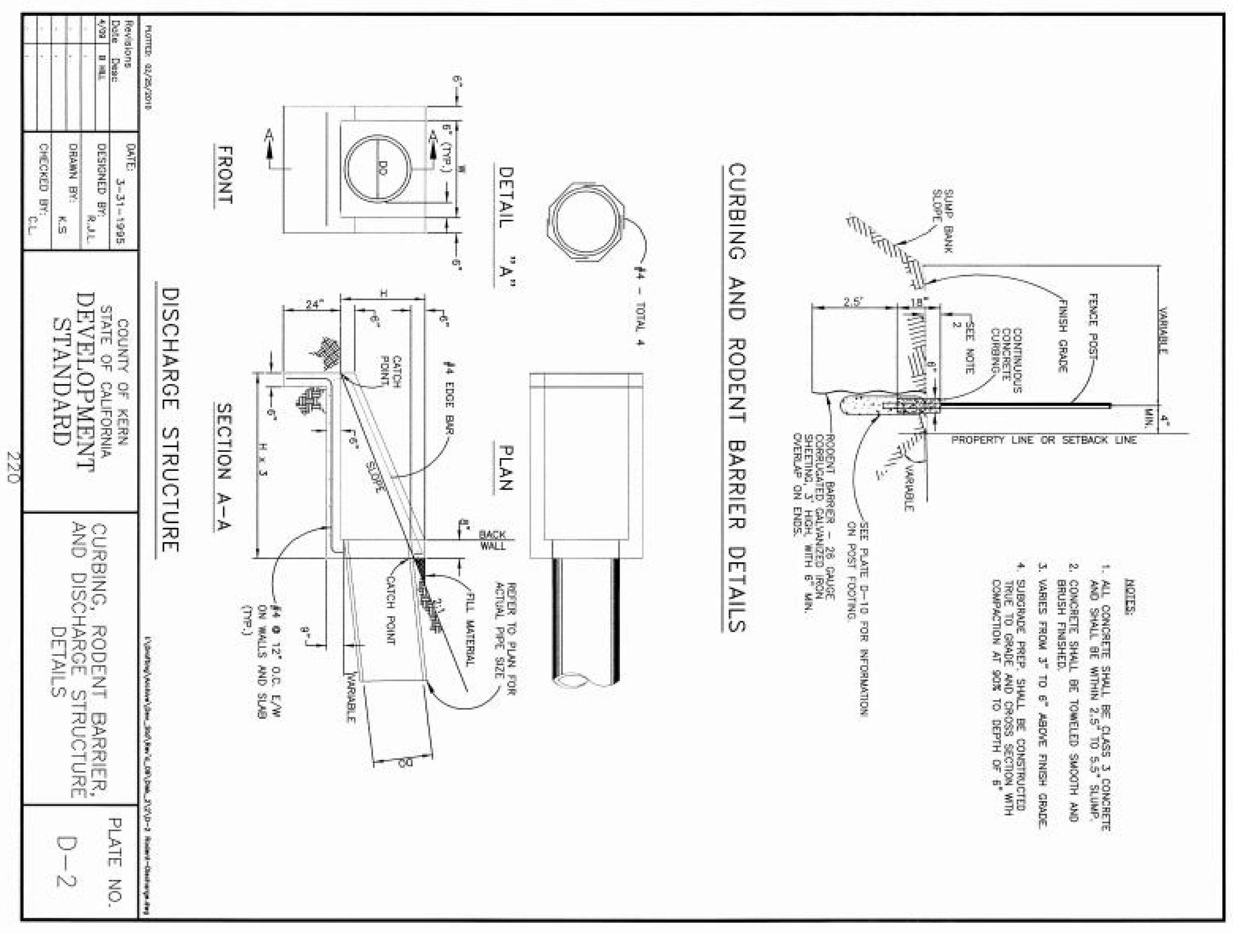

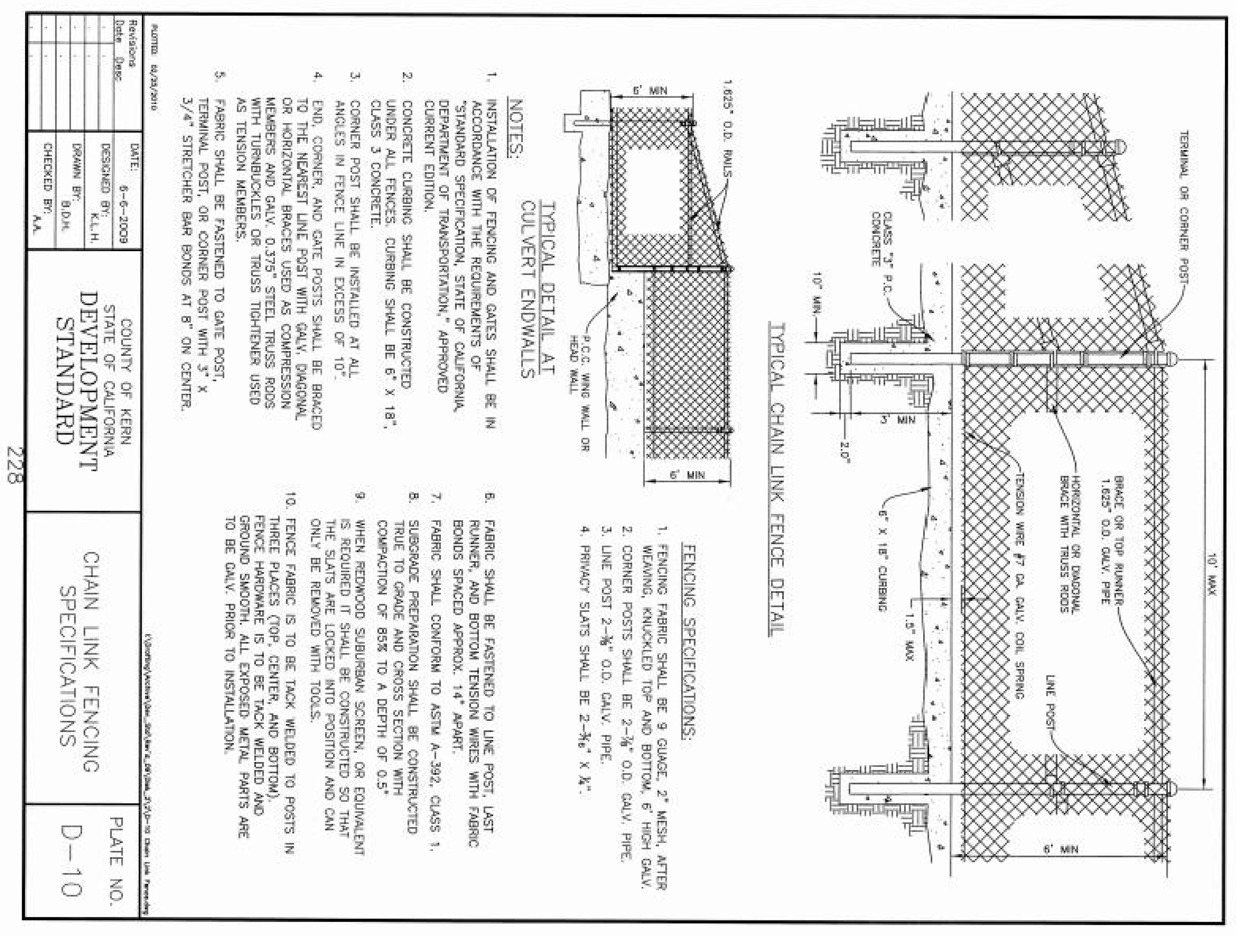

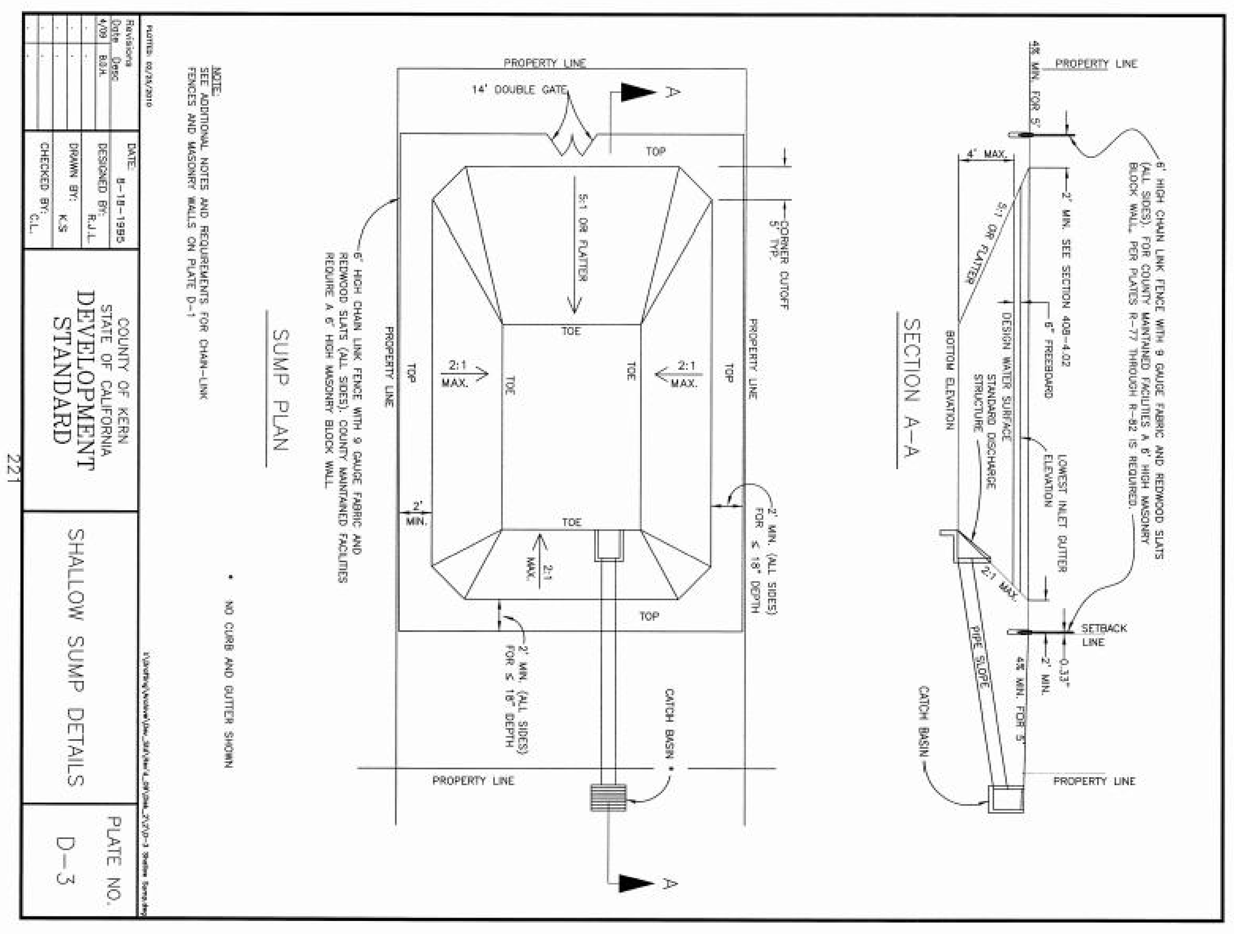

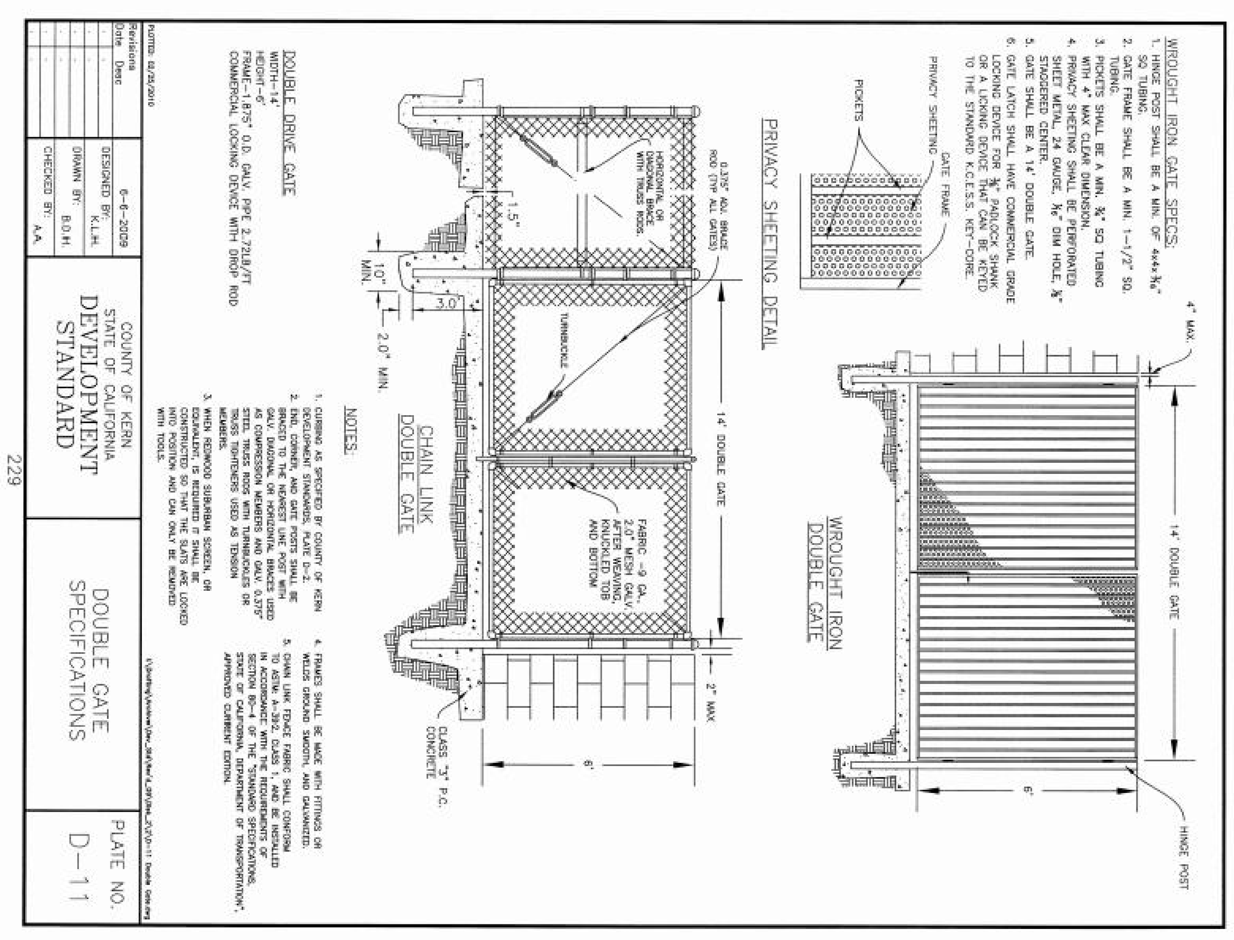

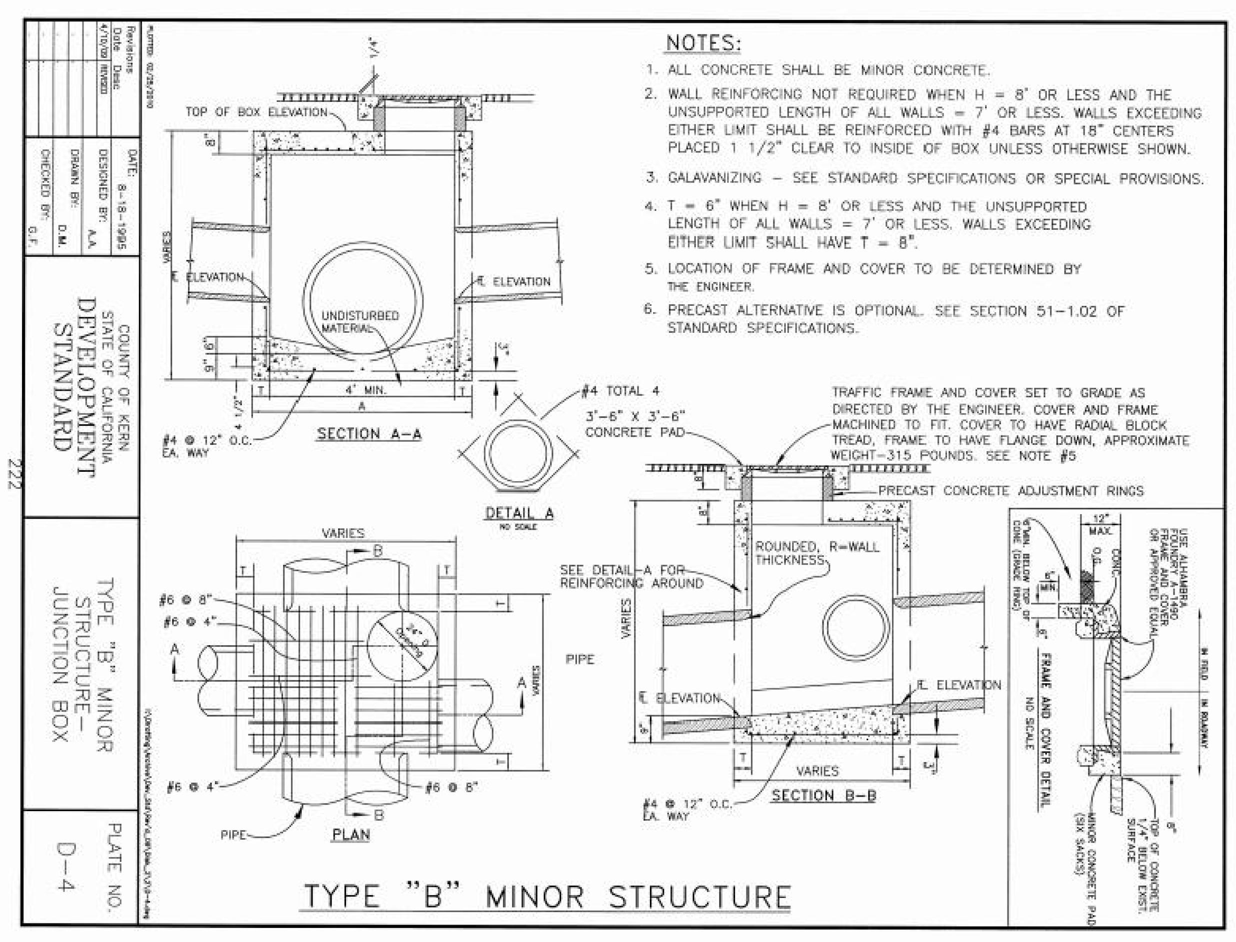

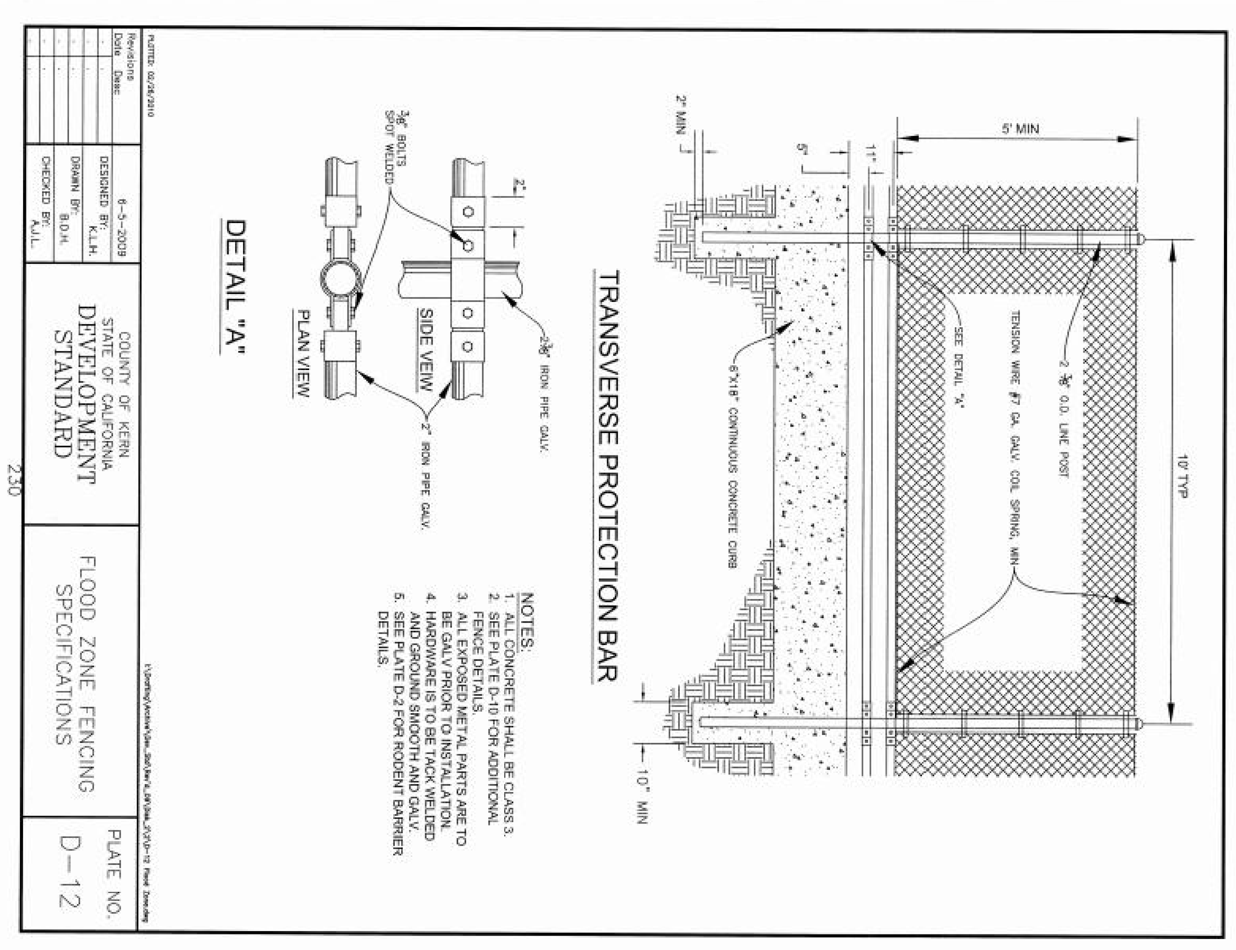

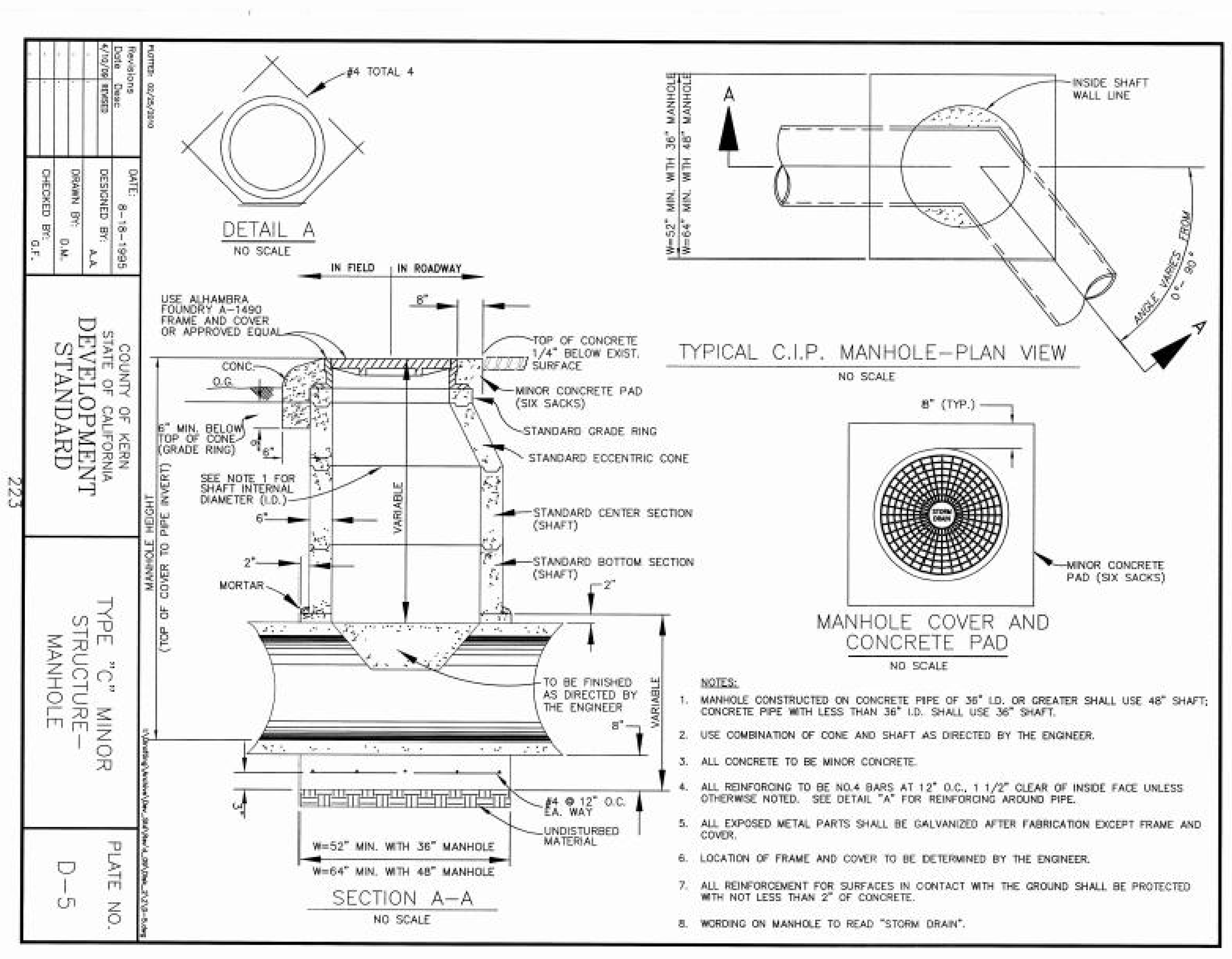

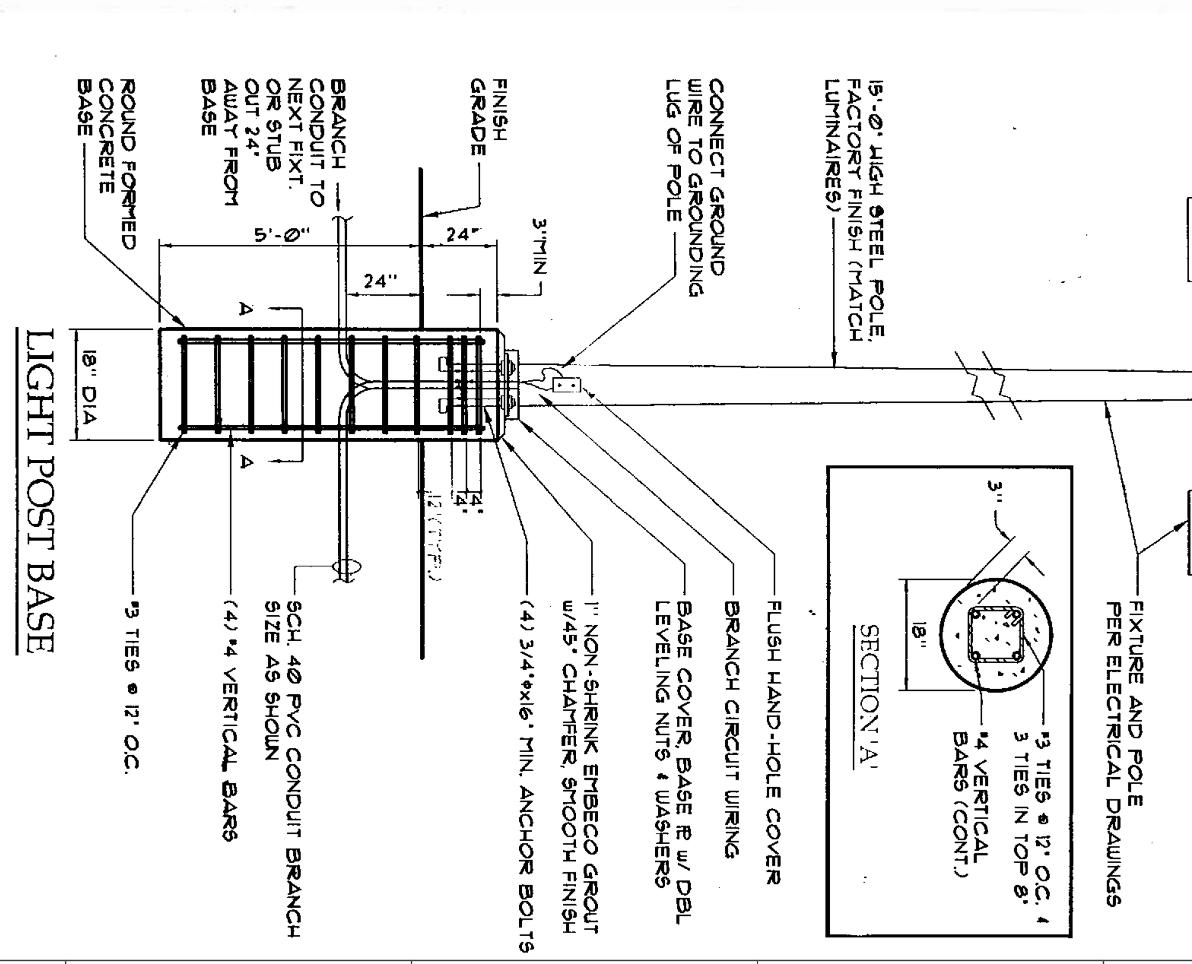

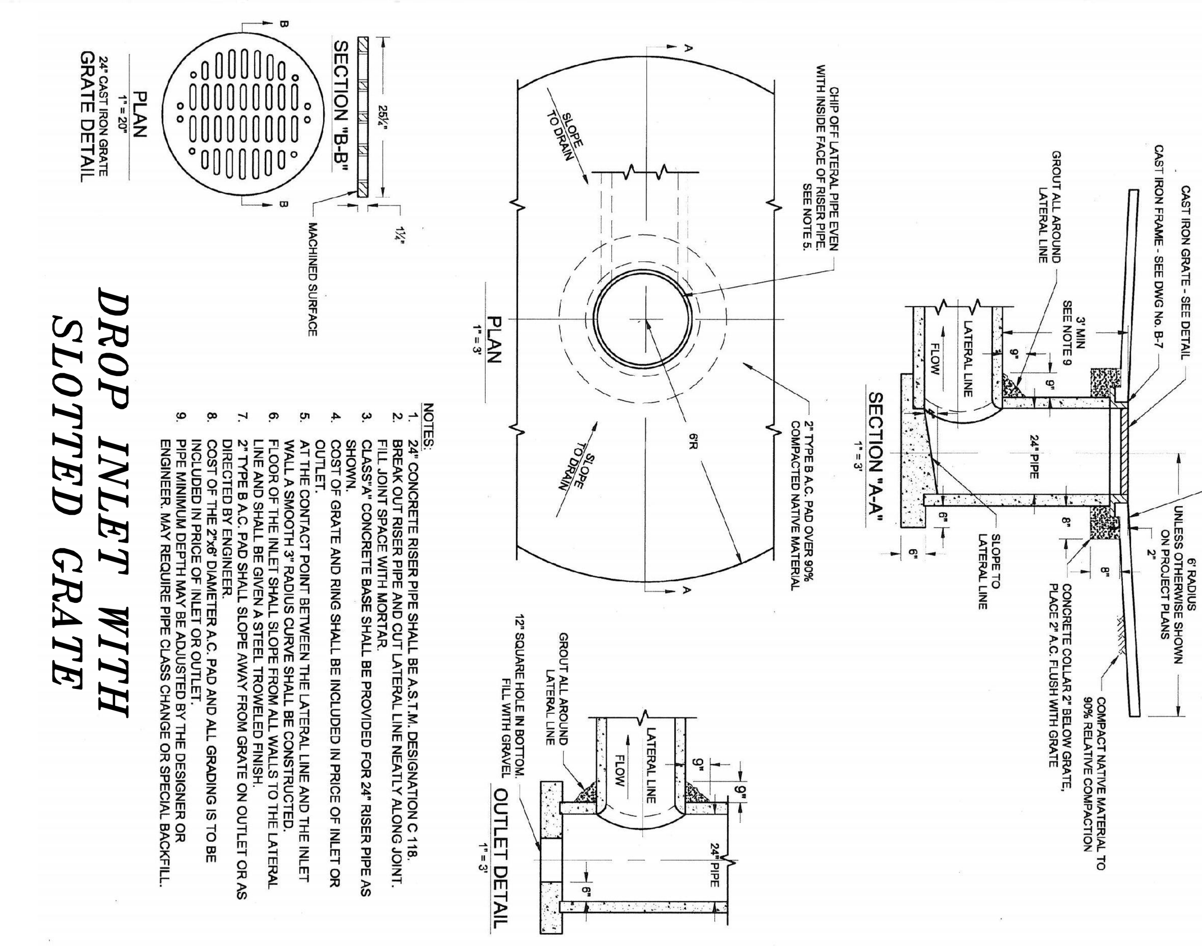

KERN COUNTY PLATES
PRINCE TRUCK STOP

CITY OF BAKERSFIELD,
KERN COUNTY, CALIFORNIA
PD PLAN #2, MAP #203
SHEET 9 OF 12

Sheet No.	C-9 (OF 12 SHEETS)
Title	NOTES
Project No.	
Date:	6-21-11
Drawn:	JMM
Checked:	MAH
Approved:	M. A. HAMZY

REVISIONS
No. Date Desc.

PRINCE TRUCK STOP
BAKERSFIELD, CALIFORNIA

HARBISON INTERNATIONAL INC.,
ENGINEERS – SURVEYORS – PLANNERS
2755 E. SHAW AVE., SUITE 101, FRESNO, CA 93710
PHONE: (559) 294-7485 FAX: (559) 294-7481

REGISTERED PROFESSIONAL ENGINEER DALE H WINN No. 23273 Exp. 12-31-11 CIVIL STATE OF CALIFORNIA

This and all other project documents and all ideas, aesthetics and designs incorporated therein are instruments of service. All project documents are the registered property of Harbison International (HI) and cannot be lawfully used in whole or in part for any project or purpose except as detailed in the contractual agreement between HI and the Client. HI hereby gives formal notice that any such project document use, reproduction, or modification (misuse) is not only unlawful but also automatically binds all parties involved with misuse to fully indemnify and defend HI and HI's consultants to the maximum legal extent against all losses, demands, claims or liabilities arising directly or indirectly from project document misuse.

Project documents describe design intent of work and are not a representation of the as-built or existing conditions. HI and HI's consultants make no representations concerning the accuracy of documents and are not responsible for any discrepancies between project documents and the existing conditions.

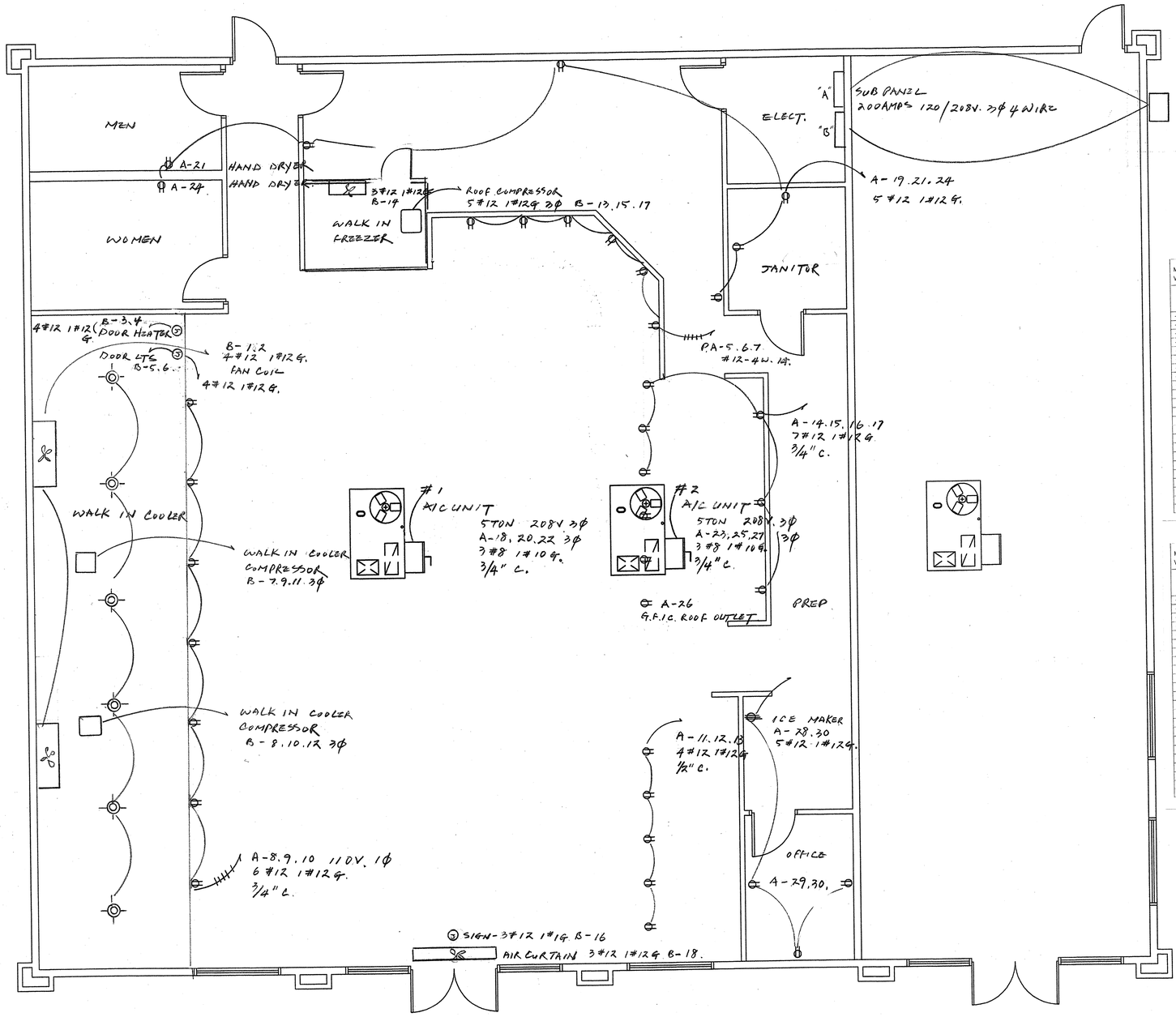

MSB
400 AMPS 120V/208V 3Φ 4 WIRE

SUB PANEL
200 AMPS 120V./208V. 3Φ 4WIRE

PANEL: "A"

MOUNTING: FLUSH
VOLTS: 120/208 PHASE: 3 WIRE: 4
MAIN: 200A
BUS: –

LOCATION	WATTAGE øA	WATTAGE øB	WATTAGE øC	LTG	CONR	MISC	CIRC		CIRC	BKR	MISC	CONR	LTG	WATTAGE øA	WATTAGE øB	WATTAGE øC	LOCATION
– LIGHTING	960						20	1	2	20				1170			LIGHTING –
– LIGHTING		1080					20	3	4	20					990		LIGHTING –
– RECEPTACLE 110V.			800				20	5	6	20						800	RECEPTACLE –
– ;	800						20	7	8	20				800			; –
– ;		800					20	9	10	20					800		; –
– ;			800				20	11	12	20						800	; –
– ;	800						20	13	14	20				800			; –
– ;		800					20	15	16	20					800		; –
– ;			800				20	17	18	40				5240			A/C UNIT –
– ;	800						20	19	20	40					5240		; –
– ;		800					20	21	22	40						5240	; –
– A/C UNIT			5240				40	23	24	20				800			RECEPTACLE –
– ;	5240						40	25	26	20					800		; –
– ;		5240					40	27	28	20						1500	ICE MAKER –
– RECEPTACLE			800				20	29	30	20				1500			; –
– EMERGENCY LTS	420						20	31	32	20					360		VAPOR LIGHT –
–								33	34								–
–								35	36								–
–								37	38								–
–								39	40								–
								41	42								

WATTS: øA: – 20130 øB: – 20050 øC: – 19580
TOTAL WATTS: – 59760 AMPS: – 95.7

PANEL: "B"

MOUNTING: FLUSH
VOLTS: 120/208 PHASE: 3 WIRE: 4
MAIN: 200A
BUS: –

LOCATION	WATTAGE øA	WATTAGE øB	WATTAGE øC	LTG	REC	MISC	CIRC		CIRC	BKR	MISC	REC	LTG	WATTAGE øA	WATTAGE øB	WATTAGE øC	LOCATION
– WALK IN FAN	940						20	1	2	20				940			WALK IN FAN –
– DOOR HEATER		1700					20	3	4	20					1700		DOOR HEATER –
– DOOR LIGHTING			1080				20	5	6	20						1080	DOOR LIGHTING –
– WALK IN COMP	1420						20	7	8	20				1420			WALK IN COMP. –
– ;		1420					20	9	10	20					1420		; –
– ;			1420				20	11	12	20						1420	; –
– WALK IN FREEZ	1380						20	13	14	20				880			WALK IN FREEZ –
– ;		1380					20	15	16	20					880		; –
– ;			1380				20	17	18	20						880	; –
–								19	20	20				1600			SIGN FACIA –
–								21	22								–
–								23	24								–
–								25	26								–
–								27	28								–
–								29	30								–
–								31	32								–
–								33	34								–
–								35	36								–
–								37	38								–
–								39	40								–
–								41	42								–

WATTS: øA: 8580 øB: 8500 øC: 7360
TOTAL WATTS: 24440 AMPS: 40.01

N

SCALE: 1/4" = 1'–0"

ELECTRICAL PLAN

This and all other project documents and all ideas, esthetics and designs incorporated herein are instruments of service, and shall remain the property of Harbison International (HI) and remain the intellectual property of HI whether the project for which they are made is executed or not. They are not to be used in whole or in part for any project or purpose except as described in the contracted agreement between HI and the Client. HI hereby gives and grants a limited non-exclusive perpetual right to the Client to reproduce these documents and ideas solely for the purpose described in the contracted agreement, but does so specifically holds all parties involved with misuse to be fully responsible. The Client and all parties involved with misuse hereby agree to fully indemnify and defend HI and HI's consultants to the maximum legal extent against all losses, damages, claims or liabilities arising directly or indirectly from project deviation of the contracted agreement.
Project documents describe design intent of work and are not to be used for construction purposes unless conditions are verified by a licensed contractor. HI is not responsible for any discrepancies concerning the accuracy of documents and are not responsible for any discrepancies between project documents and the existing conditions.

HARBISON INTERNATIONAL INC.
ENGINEERS – SURVEYORS – PLANNERS
2755 E. SHAW AVE., SUITE 101, FRESNO, CA 93710
PHONE: (559) 294-7485 FAX: (559) 294-7481

PRINCE TRUCK STOP
NWC OF STATE ROUTE 99 &
STATE ROUTE 166 (MARICOPA HWY)
BAKERSFIELD, CA 93313

REVISIONS

No.	Date	Description

Drawn: DWD
Checked: MAH
Approved: MIKE A. HAMZY

Project No: XX-XXX
Date: 3/8/11

Title: ELECTRICAL PLAN

Sheet No.: E1.0
XX OF XX SHEETS

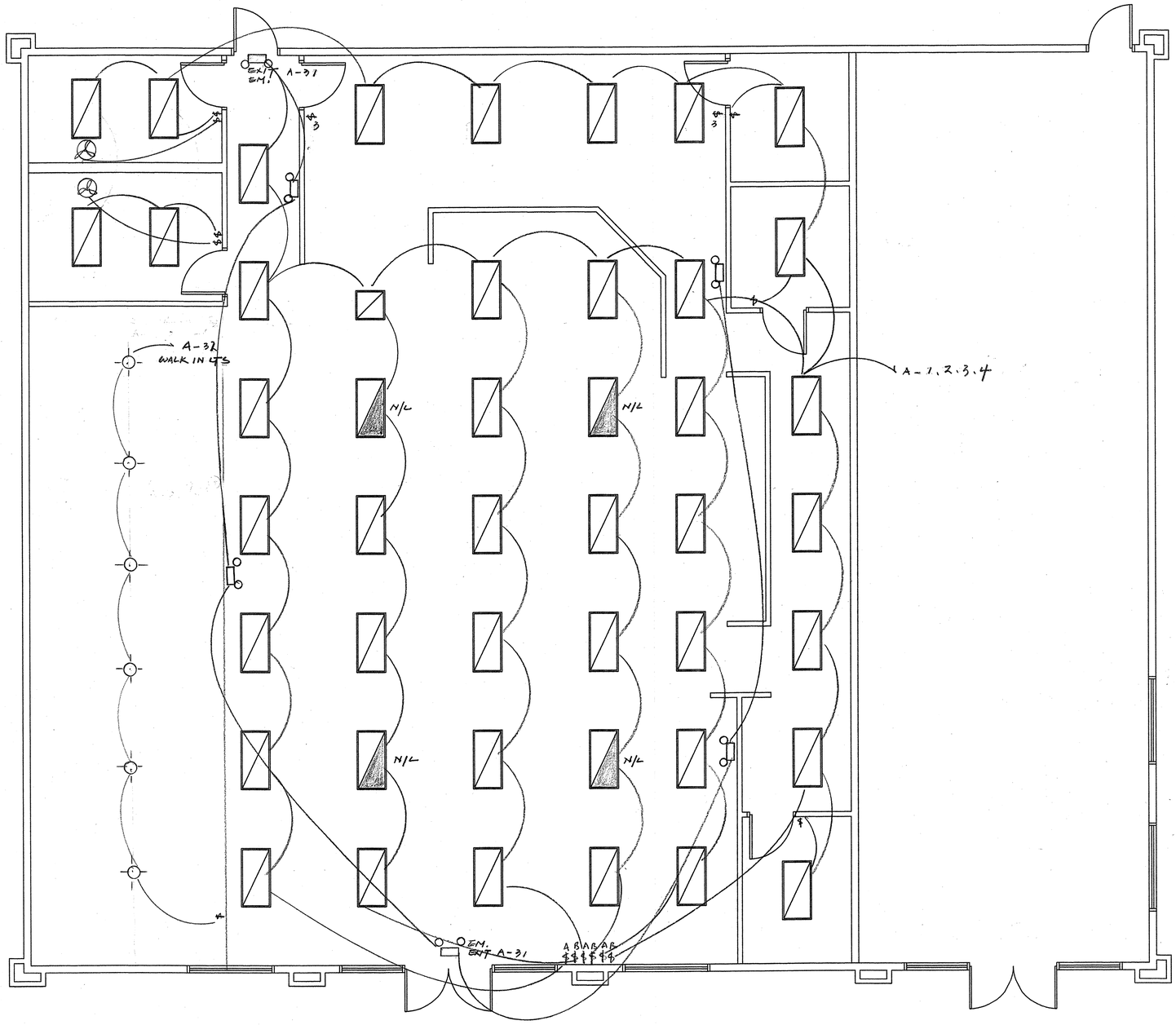

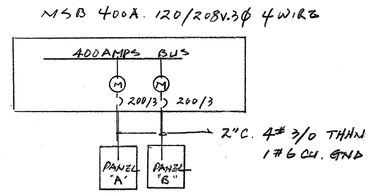

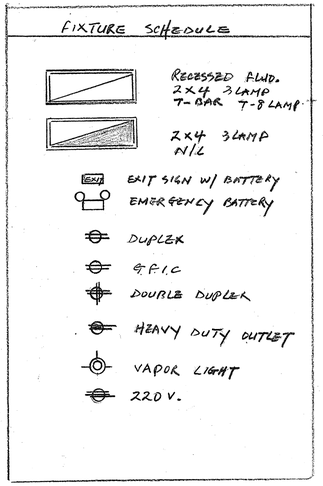

N

SCALE: 1/4" = 1'-0"

LIGHTING PLAN

This and all other project documents and all ideas, aesthetics and designs incorporated therein are instruments of service. All project documents are the registered property of Harbison International (H) and cannot be lawfully used in whole or in part for any project or purpose except as described in the contractual agreement between Hi and the Client. Hi hereby gives formal notice that any such project document use, reproduction, or modification (misuse) is not only unlawful but also automatically binds all parties involved with misuse to fully indemnify and defend Hi and Hi's consultants to the maximum legal extent against all losses, demands, claims or liabilities arising directly or indirectly from project document misuse.

Project documents describe design intent of work and are not a representation of the as-built or existing conditions. Hi and Hi's consultants make no representations concerning the accuracy of documents and are not responsible for any discrepancies between project documents and the existing conditions.

HARBISON INTERNATIONAL INC.
ENGINEERS – SURVEYORS – PLANNERS
2755 E. SHAW AVE., SUITE 101, FRESNO, CA 93710
PHONE: (559) 294-7485 FAX: (559) 294-7481

PRINCE TRUCK STOP
NWC OF STATE ROUTE 99 &
STATE ROUTE 166 (MARICOPA HWY)
BAKERSFIELD, CA 93313

REVISIONS

No.	Date	Description
-	-	-
-	-	-
-	-	-
-	-	-
-	-	-
-	-	-

Drawn: DWD
Checked: MAH
Approved: MIKE A. HAMZY

Project No: XX-XXX
Date: 3/8/11

Title
LIGHTING PLAN

Sheet No.
E1.0
XX OF XX SHEETS

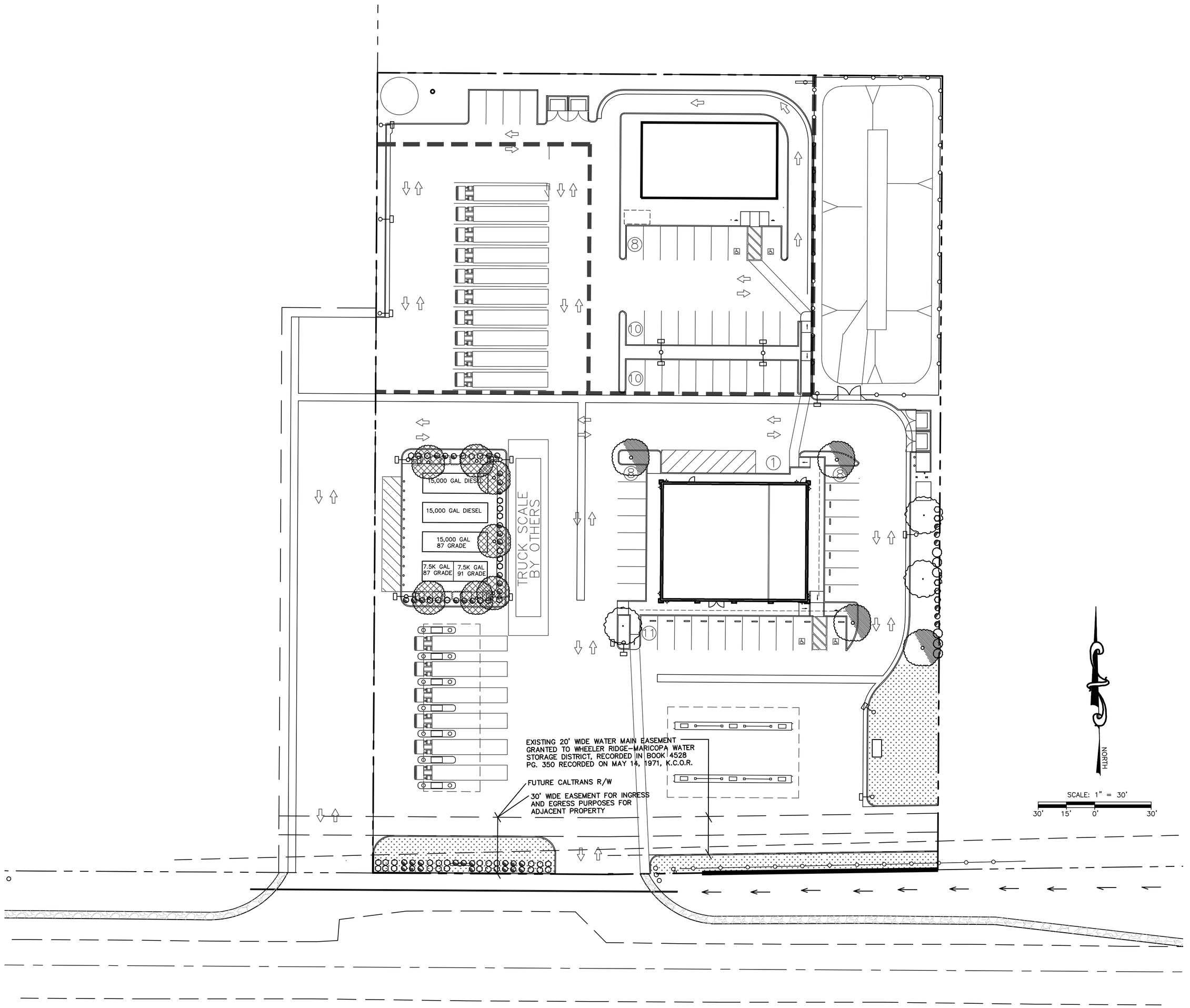

PLANTING LEGEND

FRAXINUS AMERICANA	AUTUMN APPLAUSE ASH	20 GAL.	
PYRUS CALLERYANA	BRADFORD PEAR & PISTACIA CHINENSIS	20 GAL.	
CORNUS FLORIDA 'RUBRA'	RED DOGWOOD		
BUXUS MICROPHYLLIA	UTTLE LEAF BOXWOOD	5 GAL.	
CUPHEA HYSSOPIFOLIA	MEXICAN FALSE HEATHER	5 GAL.	
CAREX PENDULA	DROOPING SEDGE	2 GAL.	
HEMEROCALLIS HYBRIDS	DAYLILY	N/A	

PLANTING NOTES:

1) THE CITY OF KERN SHALL CONDUCT INSPECTIONS OF PLANT MATERIAL. ADDITIONAL INSPECTIONS BY COUNTY AGRICULTURAL INSPECTORS WILL BE REQUIRED (PER STATE LAW) FOR QUARANTINE SPECIES OF PLANTS. CONTRACTOR WILL BE RESPONSIBLE FOR ASSURING PLANT MATERIAL THAT IS SHIPPED COMPLIES WITH STATE LAWS AND COUNTY INSPECTION REQUIREMENTS.

2) CONTRACTOR SHALL NOT INSTALL LANDSCAPE OR IRRIGATION FACILITIES WHEN IT IS OBVIOUS THAT THERE IS DISCREPANCY BETWEEN THE PLANS AND THE ACTUAL SITE CONDITIONS. CONSULT WITH CITY INSPECTOR TO RESOLVE THE DISCREPANCY.

3) THE INSTALLATION OF IRRIGATION, PLANT MATERIALS AND RELATED WORK SHALL COMPLY WITH SECTION 25 OF THE CITY OF KERN STANDARD SPECIFICATIONS.

4) TREES IN ENCLOSED PLANTER BOXES, RAISED PLANTERS OR SUBJECT TO SUBSURFACE DRIP IRRIGATION REQUIRE NO WATER BASINS.

5) ALL ROOTBALLS REMOVED FROM CONTAINER SHALL BE SCARIFIED PRIOR TO BACKFILLING.

6) PLACE TREE TIE AT LOWEST POINT ALONG TRUNK WHERE TREE HEAD WILL SUPPORT ITSELF.

7) PLANTING HOLE TO BE 2 $\frac{1}{2}$ TIMES THE DIAMETER OF THE PLANT CONTAINER AND DEPTH TO BE 1 INCH SHALLOWER THAN ROOTBALL EXCLUDING ADVENTITIOUS ROOTS.

8) ALL SHRUBS SHALL BE SET BACK 3 FEET AWAY FROM EDGE OF WALKS, WALLS, AND OTHER HARDSCAPE FEATURES. GROUND COVER SHALL BE PLANTED 1 FOOT FROM THE SAME FEATURES.

9) 12" WIDE X 6" THICK CONCRETE MOWSTRIP SHALL BE CONSTRUCTED OVER 6 INCHES OF COMPACTED NATIVE SOIL OR AS DETERMINED BY THE ENGINEER. MOWSTRIPS ARE TO DEFINE BOUNDARIES OF LANDSCAPING TO BE MAINTAINED BY THE CITY AND ARE TO BE CONSTRUCTED AS SHOWN ON THE PLANS.

10) MAXIMUM SLOPE SHALL NOT EXCEED 4:1 WITH ONE FOOT OF LEVEL GROUND BETWEEN THE SLOPE AND THE BACK OF THE SIDEWALK AND/OR FACE OF FENCE. EROSION CONTROL MEASURES SHALL BE IMPLEMENTED ON ALL SLOPES 4:1 OR STEEPER. SUCH EROSION CONTROL SHALL, AT MINIMUM INCLUDE THE USE OF SYNTHETIC EROSION CONTROL NETTING IN COMBINATION WITH GROUND COVER SPECIES APPROVED BY THE PUBLIC WORKS DEPARTMENT. THE EROSION CONTROL NETTING SHALL BE APPROVED BY THE PUBLIC WORKS DEPARTMENT PRIOR TO SHIPPING, AND INSTALLATION SHALL BE AS PER MANUFACTURER'S RECOMMENDATIONS.

11) AFTER ACCEPTANCE OF THE PROJECT BY THE CITY OF KERN, THE CONTRACTOR SHALL MAINTAIN ALL PLANTING, IRRIGATION AND ASSOCIATED SYSTEMS ACCORDING TO THE APPROVED SPECIFICATIONS AND STANDARDS FOR A PERIOD OF NO LESS THAN THE STANDARD 90 (NINETY) DAY MAINTENANCE PERIOD.

12) DRAINAGE HOLES ARE REQUIRED AS DETERMINED BY THE ENGINEER. DRILLING OF HOLES SHALL BE IN ACCORDANCE WITH THE CITY OF KERN STANDARD SPECIFICATIONS.

13) SLEEVES INSTALLED IN ROADWAYS SHALL BE OF RIGID GALVANIZED CONDUIT (RGC) OR SCHEDULE 80 PVS WITH SOME MEANS OF PIPE DETECTION.

LANDSCAPE PLANS
PRINCE TRUCK STOP

CITY OF BAKERSFIELD
KERN COUNTY, CALIFORNIA
PD PLAN #2, MAP #203
SHEET 10 OF 12

Date: 6-21-11 JOB. NO. : 09-208

This and all other project documents and all ideas, architecture and designs incorporated herein are instruments of service and shall remain the property of HARBISON INTERNATIONAL INC. The documents prepared for this project are not suitable for reuse by the Owner or others on extensions of this project or on any other project. Any reuse without written verification or adaptation by HARBISON INTERNATIONAL INC. for the specific purpose intended will be at the Owner's sole risk and without liability or legal exposure to HARBISON INTERNATIONAL INC. All titles and rights are reserved by HARBISON INTERNATIONAL INC. Any unauthorized use of these documents shall be at the user's sole risk and without liability to HARBISON INTERNATIONAL INC. and its consultants. Submission or distribution of these documents to meet official regulatory requirements or for other purposes in connection with this project is not a waiver of HARBISON INTERNATIONAL INC. common law copyright or other reserved rights. Visual contact with these documents shall constitute prima facie evidence of acceptance of these restrictions. The Owner and Contractor shall indemnify and hold harmless HARBISON INTERNATIONAL INC. and its consultants from all claims, damages, losses, expenses, fees and costs (including attorney's fees) arising out of or resulting from the reuse of these documents in accordance with this paragraph. Project documents describe design intent of work and may not represent the as-built or existing conditions. If and H's consultants make no representations concerning the accuracy of documents and are not responsible for any discrepancies between project documents and the existing conditions.

REGISTERED PROFESSIONAL ENGINEER
JAMES H. WINN
No. 23273
Exp. 12-31-11
CIVIL
STATE OF CALIFORNIA

HARBISON INTERNATIONAL INC.,
ENGINEERS - SURVEYORS - PLANNERS
2755 E. SHAW AVE., SUITE 101, FRESNO, CA 93710
PHONE: (559) 294-7485 FAX: (559) 294-7481

PRINCE TRUCK STOP
KERN COUNTY
CALIFORNIA

REVISIONS
No. Date Desc.

Drawn: JMM
Checked: MAH
Approved: M. A. HAMZY

Project No.
Date: 6-21-11

Title
LANDSCAPE PLANS

Sheet No.
L-1
OF 12 SHEETS

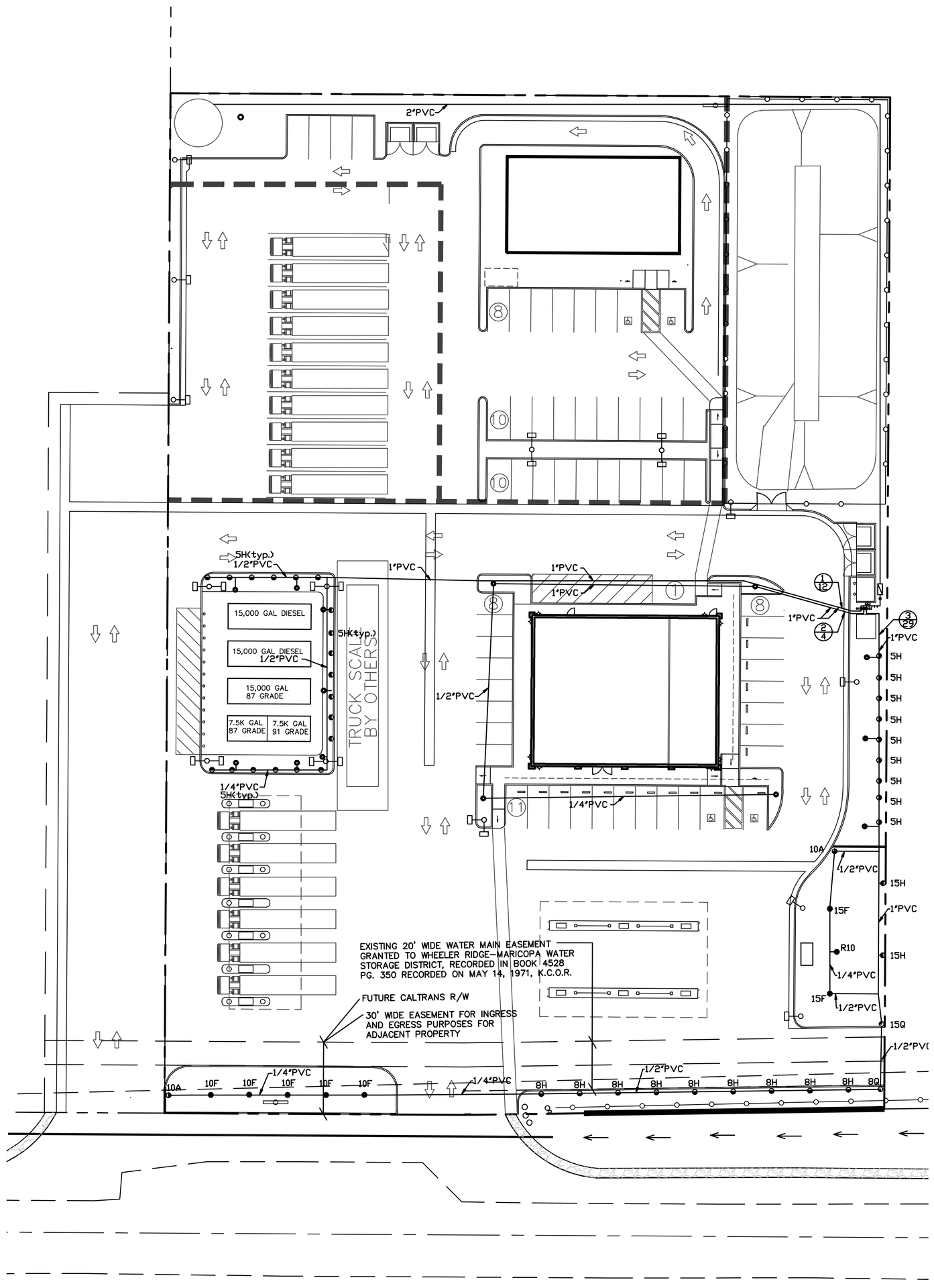

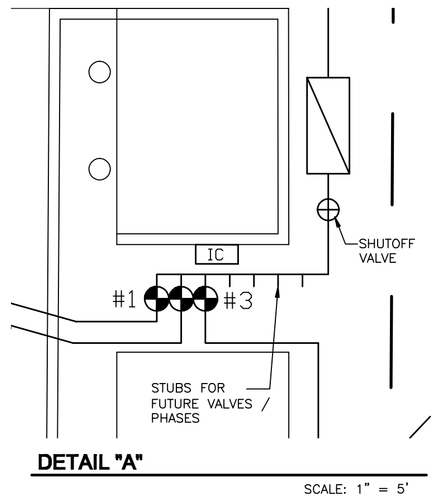

DETAIL "A"

SCALE: 1" = 5'

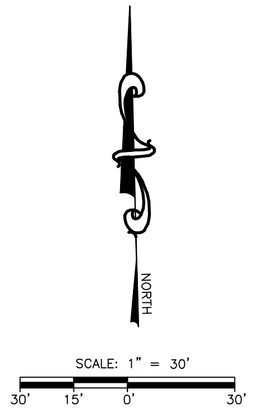

SCALE: 1" = 30'

30' 15' 0' 30'

IRRIGATION NOTES:

1) PIPING, VALVES, ETC. SHOWN WITHIN PAVED AREAS ARE FOR DESIGN CLARIFICATION ONLY AND SHALL BE INSTALLED IN PLANTING AREAS.

2) IRRIGATION SYSTEM DESIGN: 31 G.P.M. @ 35 P.S.I. AT INLET TO BACKFLOW PREVENTER.

3) CONTRACTOR SHALL NOT INSTALL LANDSCAPE OR IRRIGATION FACILITIES WHEN IT IS OBVIOUS THAT THERE IS DISCREPANCY BETWEEN THE PLANS AND THE ACTUAL SITE CONDITIONS. CONSULT WITH CITY INSPECTOR TO RESOLVE THE DISCREPANCY.

4) SPLICING OF 24 VOLT WIRES WILL NOT BE PERMITTED EXCEPT IN VALVE BOXES. LEAVE A 24" COIL OF EXCESS WIRE AT EACH SPLICE. LABEL ALL WIRES W/ WATERPROOF MARKERS AT ALL SPLICES, VALVE MANIFOLDS AND AT CONTROLLER.

5) INSTALL VALVE BOXES 4' FROM AND PERPENDICULAR TO PATH EDGE, CURB, LAWN, BUILDINGS, OR LANDSCAPE FEATURES. AT MULTIPLE VALVE BOX GROUPS, EACH BOX SHALL BE AN EQUAL DISTANCE FROM THE WALK, CURB, LAWN, ETC. AND EACH BOX SHALL BE 6" APART. SHORT SIDE OF THE VALVE BOX SHALL BE PARALLEL TO WALK, CURB, LAWN ETC. FLUSH VALVES SHALL BE PLACED 2' FROM WALK.

6) CONTRACTOR IS RESPONSIBLE FOR BACKFLOW UNIT TO BE TESTED AND CERTIFIED BY CITY OF KERN WATER DIVISION.

7) CONTRACTOR SHALL BE RESPONSIBLE FOR THE INSTALLATION OF ALL MATERIAL APPEARING ON PLAN OR AS NECESSARY TO COMPLETE THE PROJECT.

8) CONCRETE THRUST BLOCKS SHALL BE PROVIDED ON ALL MAINLINE PIPING. THEY ARE TO BE LOCATED AT ALL ABRUPT CHANGES IN PIPELINE GRADE, CHANGES TO HORIZONTAL ALIGNMENT, REDUCTION IN PIPE SIZES, END OF LINE AND IN-LINE VALVES TO ABSORB ANY AXIAL THRUST OF THE PIPE. THE PIPE MANUFACTURE'S RECOMMENDATIONS FOR THRUST BLOCKS MUST BE FORMED AGAINST UNDISTURBED EARTH.

9) ALL MAIN LINE PIPES SHALL BE PRESSURE TESTED PER STANDARD IRRIGATION SPECIFICATIONS WITHOUT THE VALVES INSTALLED. THE CONTRACTOR SHALL PROVIDE ALL EQUIPMENT NEEDED. MINIMUM OF 5 PSI LOSS ALLOWED PER 4 HOUR TEST PERIOD AS INSPECTED BY THE CITY'S CONSTRUCTION MANAGEMENT DIVISION. IF ANY LEAKS DEVELOP, THE REPAIRS ARE TO BE MADE AND TEST REPEATED UNTIL THE SYSTEM IS PROVEN WATERTIGHT. THE CONTRACTOR IS TO CENTER LOAD THE PIPE AND LEAVE ALL JOINTS EXPOSED FOR INSPECTION. THE PRESSURE TEST SHALL BE OBSERVED AND APPROVED BY THE INSPECTOR. WHEN THE PIPE IS PROVEN WATERTIGHT AND ONLY THEN MAY THE LINE BE BACKFILLED.

10) ALL IRRIGATION WORK SHALL BE INSTALLED AS PER CITY OF KERN STANDARD SPECIFICATIONS, SECTION 25. SPECIFICATIONS ARE AVAILABLE AT CITY HALL.

IRRIGATION LEGEND

- 15F ● HUNTER 4" POP-UP WITH NOZZLE MODEL 15F (1.96 GPM)
- 15H ◒ HUNTER 4" PROS-04 POP-UP WITH NOZZLE MODEL 15H (0.98 GPM)
- 10F ● HUNTER 4" PROS-04 POP-UP WITH NOZZLE MODEL 10A (1.62 GPM)
- 10A ◒ HUNTER 4" PROS-04 POP-UP WITH NOZZLE MODEL 10A (1.31 GPM)
- 8H ◒ HUNTER 4" PROS-04 POP-UP WITH NOZZLE MODEL 8H (0.48 GPM)
- 8Q ◔ HUNTER 4" PROS-04 POP-UP WITH NOZZLE MODEL 8Q (0.24 GPM)
- 5H ◒ HUNTER 4" PROS-04 POP-UP WITH NOZZLE MODEL MS-H (0.28 GPM)
- ● HUNTER 4" PROS-04 POP-UP WITH NOZZLE MODEL PCB-10 (1 GPM)
- ◔ PROPOSED 100FC 1" IRRITROL ELECTRIC VALVE
- ⍁ PROPOSED 825 Y FEBCO PRESSURE BACKFLOW DEVICE
- ——— PVC PIPE AS DESCRIBED (SLEEVES UNDER CONCRETE AND STREET)
- (1/20) = VALVE / GPM

LANDSCAPE IRRIGATION PLANS
PRINCE TRUCK STOP

CITY OF BAKERSFIELD
KERN COUNTY, CALIFORNIA
PD PLAN #2, MAP #203
SHEET 11 OF 12

Date: 6-21-11 JOB. NO. : 09-208

This and all other project documents and all ideas, architectural and designs incorporated therein are instruments of service and shall remain the property of Harbison International (HI) and cannot be lawfully used in whole or in part for any project or purpose except as described in the contractual agreement between HI and the Client. HI retains all common law, statutory and other reserved rights, including the copyright. Client (release) is not only entitled but also automatically binds all parties involved with release to fully indemnify and defend HI and HI's consultants to the maximum legal extent against all claims arising from unauthorized use of documents and any project modifications made. Project documents describe design intent of work and may not represent completion of the as-built or existing conditions. HI and HI's consultants make no representations concerning the accuracy of documents and are not responsible for any discrepancies between project documents and the existing conditions.

REGISTERED PROFESSIONAL ENGINEER
MAE H WINN
No. 23273
Exp. 12-31-11
CIVIL
STATE OF CALIFORNIA

HARBISON INTERNATIONAL INC.,
ENGINEERS - SURVEYORS - PLANNERS
2755 E. SHAW AVE., SUITE 101, FRESNO, CA 93710
PHONE: (559) 294-7485 FAX: (559) 294-7481

PRINCE TRUCK STOP
KERN COUNTY
CALIFORNIA

REVISIONS
No. Date Desc.

Drawn: JMM
Checked: MAH
Approved: M. A. HAMZY

Project No.
Date: 6-21-11

Title
LANDSCAPE PLANS

Sheet No.
L-2
OF 12 SHEETS

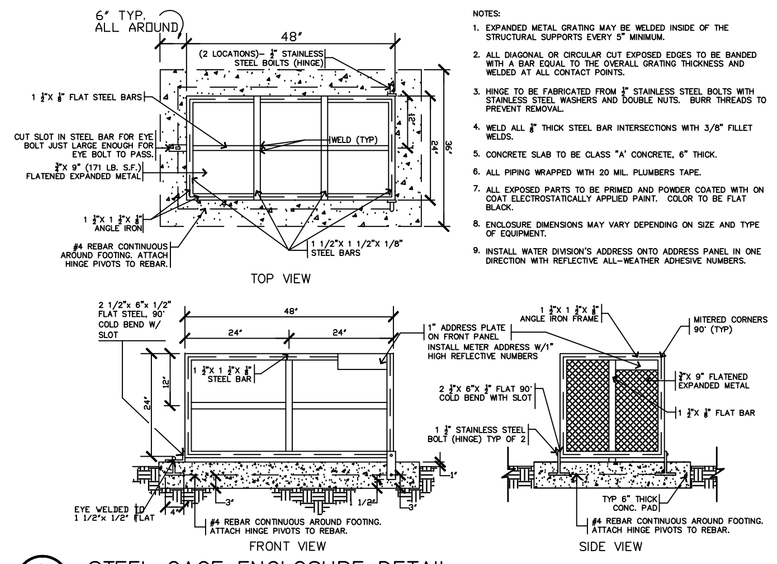

NOTES:
1. EXPANDED METAL GRATING MAY BE WELDED INSIDE OF THE STRUCTURAL SUPPORTS EVERY 5" MINIMUM.
2. ALL DIAGONAL OR CIRCULAR CUT EXPOSED EDGES TO BE BANDED WITH A BAR EQUAL TO THE OVERALL GRATING THICKNESS AND WELDED AT ALL CONTACT POINTS.
3. HINGE TO BE FABRICATED FROM 3" STAINLESS STEEL BOLTS WITH STAINLESS STEEL WASHERS AND DOUBLE NUTS. BURR THREADS TO PREVENT REMOVAL.
4. WELD ALL 3" THICK STEEL BAR INTERSECTIONS WITH 3/8" FILLET WELDS.
5. CONCRETE SLAB TO BE CLASS "A" CONCRETE, 6" THICK.
6. ALL PIPING WRAPPED WITH 20 MIL. PLUMBERS TAPE.
7. ALL EXPOSED PARTS TO BE PRIMED AND POWDER COATED WITH ON SITE ELECTROSTATICALLY APPLIED PAINT. COLOR TO BE FLAT BLACK.
8. ENCLOSURE DIMENSIONS MAY VARY DEPENDING ON SIZE AND TYPE OF EQUIPMENT.
9. INSTALL WATER DIVISION'S ADDRESS ONTO ADDRESS PANEL IN ONE DIRECTION WITH REFLECTIVE ALL-WEATHER ADHESIVE NUMBERS.

A — STEEL CAGE ENCLOSURE DETAIL
NOT TO SCALE

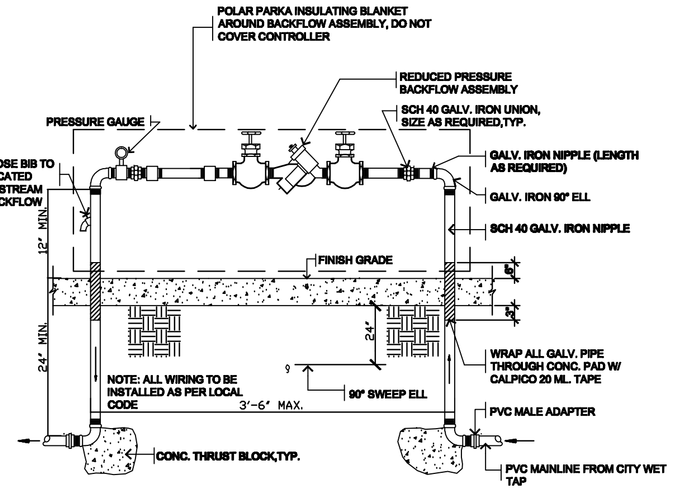

B — BACKFLOW PREVENTION ASSEMBLY
NOT TO SCALE

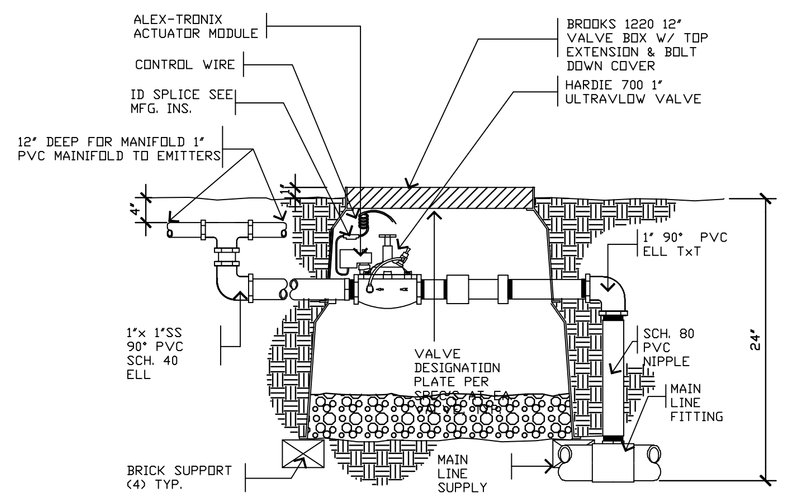

C — PRESSURE COMPENSATING CONTROL VALVE
NOT TO SCALE

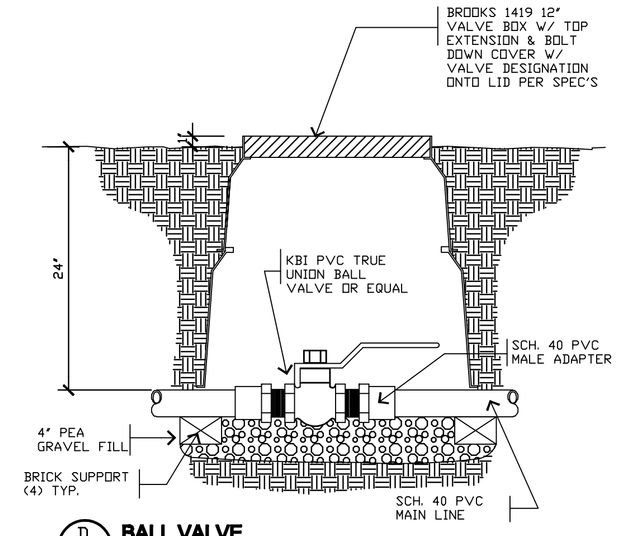

D — BALL VALVE
NOT TO SCALE

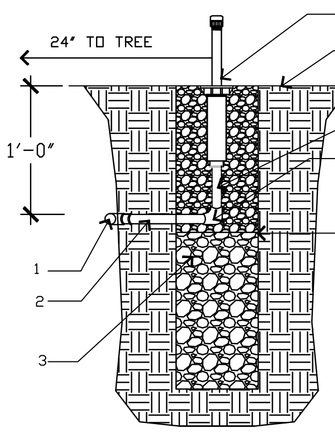

LEGEND

1 LATERAL LINE AND FITTING

2 KING BROS. FR-100 FLEX RISER

3 BACKFILL PIPE W/ CLEAN WASHED 1" DIA. DRAINAGE ROCK UP TO THE BASE OOF THE SPRINKLER THEN FILL THE REMAINING PIPE W/ 3/8" TO 1/2" WASHED PEA GRAVEL

4 COMPACTED SUBGRADE 95%

5 3" POP UP BODY SET FLUSH W/ ROCK

6 FINISH GRADE

7 1/2" SCH 80 PVC NIPPLE 9LENGTH AS REQ.

8 SCH 40 PVC 90 DEGREE ELL TxT

9 4" DIA X 36" LONG PERF. ADS PIPE, W/ DRAIN GUARD #0472-0250 ORIENT THE PERFORATIONS TOWARDS THE TREE

E — TREE & PLANTER BUBBLER DETAIL

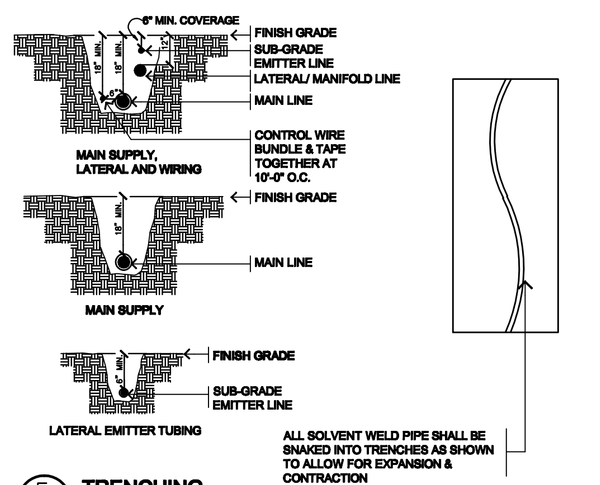

F — TRENCHING
NOT TO SCALE

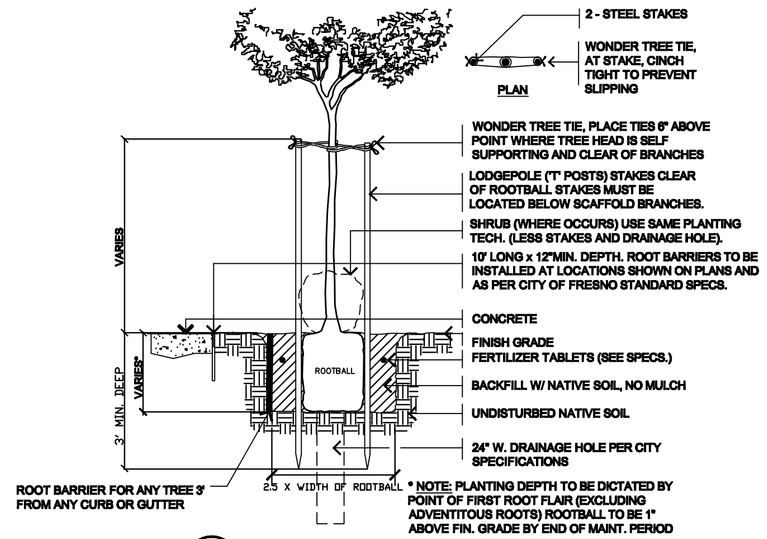

G — BUFFER TREE AND SHRUB PLANTING
NOT TO SCALE

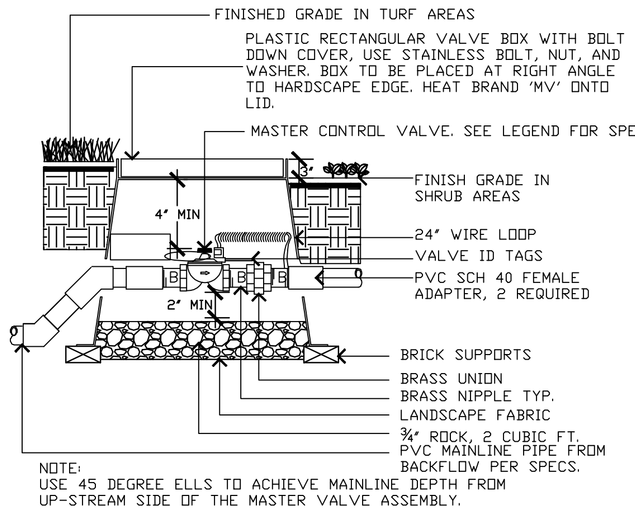

NOTE:
USE 45 DEGREE ELLS TO ACHIEVE MAINLINE DEPTH FROM UP-STREAM SIDE OF THE MASTER VALVE ASSEMBLY.

H — MASTER VALVE
NOT TO SCALE

DRIP SYSTEM:
Make connection at the drip valve location with the following elements.

Rainbird XCZ-075 3/4" drip valve assembly

Rainbird (or equal) XT 700-100) drip pipe and fittings.

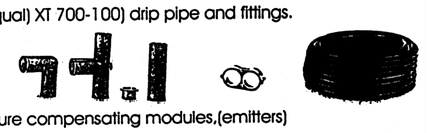

Rainbird pressure compensating modules,(emitters)

2 gph for shrubs

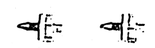

5 gph for trees on same system. Use 2

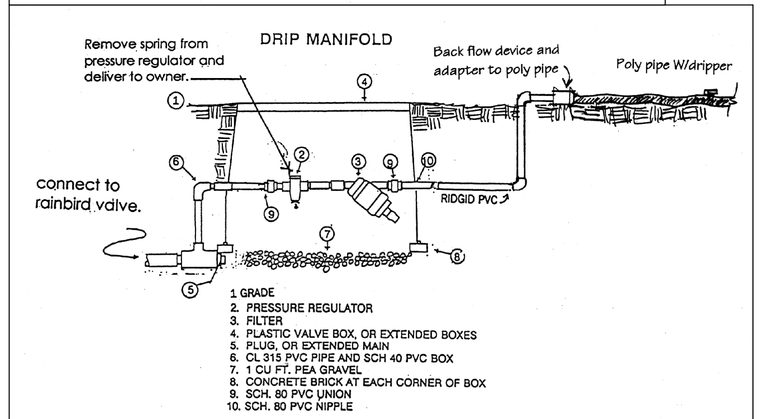

NOTE: SLOPE SOIL AWAY FROM VALVE BOXES TO DRAIN AWAY WATER.

LANDSCAPE DETAIL SHEET
PRINCE TRUCK STOP

CITY OF BAKERSFIELD
KERN COUNTY, CALIFORNIA
PD PLAN #2, MAP #203
SHEET 12 OF 12

Date: 6-21-11 JOB. NO. : 09-208

This and all other project documents and all ideas, erstheticn and designs incorporated herein are the property of Harbison International (HI) and cannot be loaded used in whole or in part for any project or purpose except as described in the contractual agreement between HI and the Client. HI retains all common law, statutory and other reserved rights, including the copyright. Harbison International (HI) is not only entitled but also automatically binds all parties involved with misuse to fully indemnify and defend HI and HI's consultants to the maximum legal extent against all claims, damages and costs including attorney's fees and court costs arising from the misuse. Project documents describe design intent of work and do not represent complete information of the as-built or existing conditions. HI and HI's consultants make no representations concerning the accuracy of documents and are not responsible for any discrepancies between project documents and the existing conditions.

HARBISON INTERNATIONAL INC.,
ENGINEERS - SURVEYORS - PLANNERS
2755 E. SHAW AVE., SUITE 101, FRESNO, CA 93710
PHONE: (559) 294-7485 FAX: (559) 294-7481

REGISTERED PROFESSIONAL ENGINEER — MAE H WINN — No. 23273 — Exp. 12-31-11 — CIVIL — STATE OF CALIFORNIA

PRINCE TRUCK STOP
KERN COUNTY
CALIFORNIA

REVISIONS
No. Date Desc.

Drawn: JMM
Checked: MAH
Approved: M. A. HAMZY

Project No.
Date: 6-21-11

Title
LANDSCAPE PLANS

Sheet No.
L-3
OF 12 SHEETS

MECHANICAL NOTES:
1. GENERAL CONTRACTOR TO SECURE ALL PERMITS AND DEFRAY INSPECTION FEES.

2. FILTER IN RETURN AIR DUCTS TO BE READILY ACCESSIBLE FOR CLEANING OR REPLACEMENT.
3. CONDENSATE DRAINS TO BE INSTALLED BY THE PLUMBING CONTRACTOR.
4. EXHAUST FAN DUCTWORK BY MECHANICAL CONTRACTOR, WIRING BY ELECTRICAL CONTRACTOR.
5. PROVIDE MANUALLY SET AUTOMATICALLY SET THE CLOCK TO TURN OFF A/C EQUIPMENT DURING PERIODS OF NON-USE.
6. PROVIDE BACKDRAFT DAMPERS ON ALL EXHAUST FANS.
8. PROVIDE PAN AND 1 1/2" OF PVC DRAIN PIPE TO EXTERIOR FOR ATTIC-MOUNT EQUIPMENTS.
9. PROVIDE LIGHT AND SWITCH FOR ALL ATTIC-MOUNT EQUIPMENTS. (SEE ELEC'L PLAN)
10. ALL INSULATION MATERIALS, INCLUDING FACINGS SUCH AS VAPOR BARRIERS OR BREATHER PAPERS INSTALLED WITHIN FLOOR, CEILING ASSEMBLIES, ROOF/CLG. ASSEMBLIES, WALLS, CRAWL SPACES OR ATTICS, SHALL HAVE A FLAME SPREAD RATING NOT TO EXCEED 25 AND A SMOKE DENSITY NOT TO EXCEED 50 WHEN TESTED IN ACCORDANCE TO UBC-42-1 (UBC SECTION 1713)
11. WHEN MORE THAN ONE HEATING/COOLING VENT. EQUIP. IS USED/INSTALLED ON THE ROOF OF A BUILDING OR WITHIN THE BUILDING, IT SHALL BE PERMANENTLY IDENTIFIED AS TO THE AREA OR SPACE SERVED BY THE EQUIPMENT.
12. ONLY COPPER OR FERROUS PIPES MAY PENETRATE FIRE RESISTIVE ASSEMBLIES GREATER THAN ONE-HOUR RATING.
13. ALL PENETRATION SHALL BE FIRE-STOPPED WITH AN APPROVED LISTED SYSTEM.
14. VENT PIPES SHALL EQUAL AGGREGATE CROSS-SECTIONAL AREA, WHICH SHALL NOT BE LESS THAN THAT OF THE LARGEST REQUIRED BUILDING SEWER AS DETERMINED FROM TABLE 4-3 (UPC 504-9)
15. PROVIDE WATERPROOF FLASHING AT ALL ROOF OPENINGS AS REQUIRED TO MAKE WATER-TIGHT.
16. THERMOSTATS FURNISHED BY AND INSTALLED BY A.C., WIRING BY ELECTRICAL CONTRACTOR. MOUNTED MIN 48", MAX 54" ABOVE FIN. FLOOR

17. PROVIDE AUTOMATIC CHANGE-OVER COOLING AND HEATING THERMOSTAT WITH LOCKING COVER.
18. SMOKE DETECTION SYSTEM IS REQ'D IN SUPPLY AIR PLENUM TO AUTOMATICALLY SHUT-DOWN ALL AIR MOVING EQUIP. WHEN SMOKE IS DETECTED IN THE SYSTEM. THIS REQ. IS FOR ALL UNITS. MULTIPLE UNITS IN A SINGLE TENANT SPACE ARE TREATED AS ONE SYSTEM. PER CMC 609.
19. PRIOR TO MECHANICAL PERMIT FINAL, A SMOKE DETECTOR SHUT-OFF TEST WILL BE REQUIRED. 2001 CMC 609.
20. EVAPORATIVE COOLERS MUST HAVE OVERFLOW DRAINS AND BACKDRAFT DAMPERS.

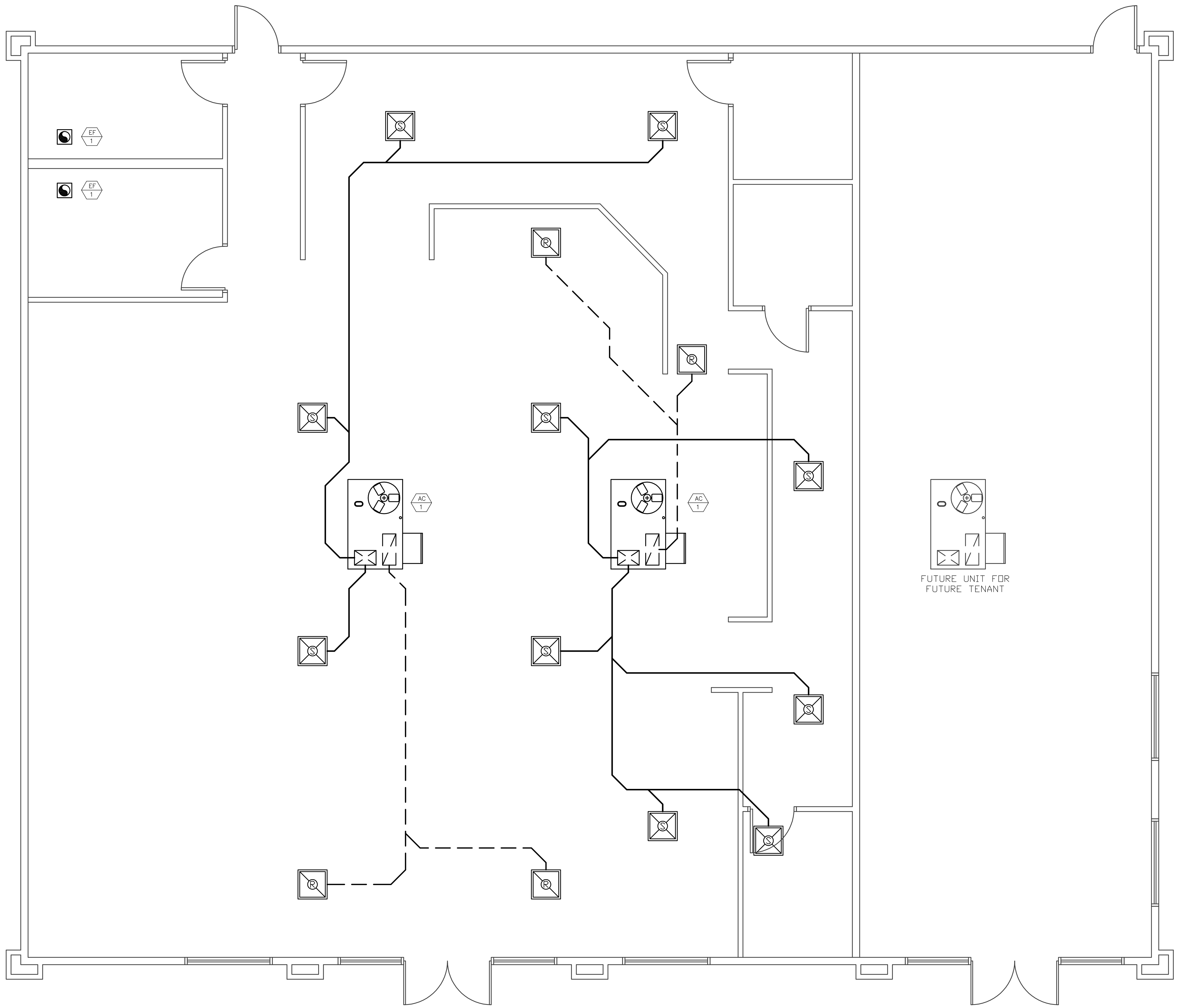

CODE RULES AND REGULATIONS

ALL WORK AND MATERIAL SHALL BE PERFORMED AND INSTALLED IN COMPLIANCE WITH THE FOLLOWING CODES AS ADOPTED AND AMENDED BY THE INSPECTING AUTHORITY. NOTHING IN THESE PLANS IS TO BE CONSTRUED TO PERMIT WORK NOT CONFORMING TO THESE CODES OR OTHERS APPLICABLE TO THIS PROJECT:

2007 CALIFORNIA BUILDING CODE.
2007 CALIFORNIA PLUMBING CODE
2007 CALIFORNIA MECHANICAL CODE.
2007 CALIFORNIA ELECTRICAL CODE.
2007 CALIFORNIA FIRE CODE.
LATEST NON-RESIDENTIAL CEC ENERGY STANDARDS.

AIR CONDITIONING NOTES:

1. ALL SHEET METAL DUCTS SHALL BE FABRICATED AND INSTALLED IN ACCORDANCE WITH THE LATEST EDITION OF THE ASHRAE GUIDE.
2. ALL FLEXIBLE DUCTS AND DUCT CONNECTIONS SHALL BE ROUND DUCTS TO AND INCLUDING 14".
3. JOINTS AND SEAMS OF DUCT SYSTEMS AND THEIR COMPONENTS SHALL NOT BE SEALED WITH CLOTH BACK RUBBER ADHESIVE DUCT TAPES UNLESS SUCH TAPE IS USED IN COMBINATION WITH MASTIC AND DRAWBANDS. PER CBC 2001 ENERGY STD's, SECTION 124.
4. SHEET METAL DUCTS SHALL BE INSULATED EXTERNALLY WITH 2" THICK FIBERGLASS "AEROCOR" PF-335 1.5# DENSITY EXCEPT THOSE DUCTS INTERNALLY LINED. ALL DUCTS NOTED OR SHOWN "ACOUSTIC LINED" SHALL BE INTERNALLY INSTALLED WITH BLACK MAT-FACED FIBERGLASS VINYL COATED LINER 300# DENSITY 1/2" THICKNESS EXCEPT THOSE ABOVE ROOF SHALL BE INSULATED WITH 1' THICKNESS DUCT DIMENSIONS ARE NET INSIDDE.
5. ALL ROOF MOUNTED EQUIPMENT WITH ROTATIVE COMPONENTS SHALL BE MOUNTED ON RUBBER IN SHEAR VIBRATION ISOLATORS UNLESS OTHERWISE NOTED.
6. WORKMANSHIP:
   ALL WORK SHALL BE DONE IN A NEAT & WORKMANLIKE MANNER ACCORDING TO THE BEST TRADE PRACTICE BY THOSE SKILLED IN THE PARTICULAR TRADE. PIPES, FIXTURES, EQUIPMENT, GRILLES, REGISTERS, ETC. TO BE PLUMB, LEVEL, SQUARE, OR CENTERED, ETC. TO GIVE A NEAT AND PLEASING APPEARANCE.
   ALL EQUIPMENT IS TO BE INSTALLED STRICTLY PER MANUFACTURERS RECOMMENDATIONS COORDINATE ALL WORK WITH OTHER TRADES.
7. WARRANTY:
   ALL MATERIAL AND EQUIPMENT INSTALLED UNDER THIS CONTRACT SHALL BE GUARANTEED FREE FROM ALL MECHANICAL, ELECTRICAL AND WORKMANSHIP DEFECTS FOR A PERIOD OF ONE YEAR FROM DATE OF FINAL ACCEPTANCE. THE CONTRACTOR SHALL BE RESPONSIBLE FOR ALL DAMAGES TO THE PREMISES CAUSED BY LEAKS &/OR BREAKS IN PIPES AND FIXTURES INSTALLED UNDER THIS CONTRACT.
8. ELECTRICAL VOLTAGE:
   AIR CONDITIONING CONTRACTOR SHALL CONFIRM ALL SYSTEM VOLTAGES BEFORE BIDDING AND BOOST TRANSFORMERS ON EACH PHASE IF REQUIRED.
9. BY OTHERS:
   A. PLUMBING CONTRACTOR: GAS, WATER AND CONDENSATE PIPING INCLUDING FINAL CONNECTIONS WITH SHUT-OFF VALVE.
   B. ELECTRICAL CONTRACTOR: ALL POWER AND CONDUIT, WIRING, DISCONNECTS AND FINAL CONNECTIONS. NO FIELD SUPPLIED ELECTRICAL DEVICE SHALL BE MOUNTED ON AIR CONDITIONING UNITS AND NO RIGID ELECTRICAL CONNECTIONS SHALL BE MADE.
   C. GENERAL CONTRACTOR: CUTTING, FRAMING, PATCHING, FURRING, PAINTING.
10. J.P. LAMBORN FLEX DUCT (R-8), SUPPORT WITH 26 GA. X 1 1/2 GALVANIZED STRAPS EVERY 48" MAX UNLESS OTHERWISE REQUIRED BY MANUFACTURER. UMC 603.4

EQUIPMENT SCHEDULE

SYMBOL	AC 1	EF 1
MANUFACTURER	CARRIER	BROAN
MODEL NO.	#48HJD006	QTXE080
CFM RATING	4100	55 @ .25 SP
MIN. CIRC. AMPS W/STRIP HEATER	–	.2
VOLTAGE/PHASE	208/230-3	120
EER/SEER RATING	11.9/14.0	
SSE/AFUE RATING	82.0/82.8%	
FAN HORSEPOWER	----	
FUEL (NAT. OR LPG)	ELEC.	
OUTSIDE AIR (MIN.)	–	
COOLING CAPACITY (BTUH)	59,000	
HEATER INPUT (AMPS)	–	
ECONOMISER REQ'D.	–	
FACTORY CURB REQUIRED	–	
ELEC. STRIP HEATER	–	
UNIT OPERATING WEIGHT (LBS)	560	12.4

NOTE: PRIOR TO MECHANICAL PERMIT FINAL, A SMOKE DETECTOR SHUT-OFF TEST WILL BE REQUIRED 2001 CMC 609

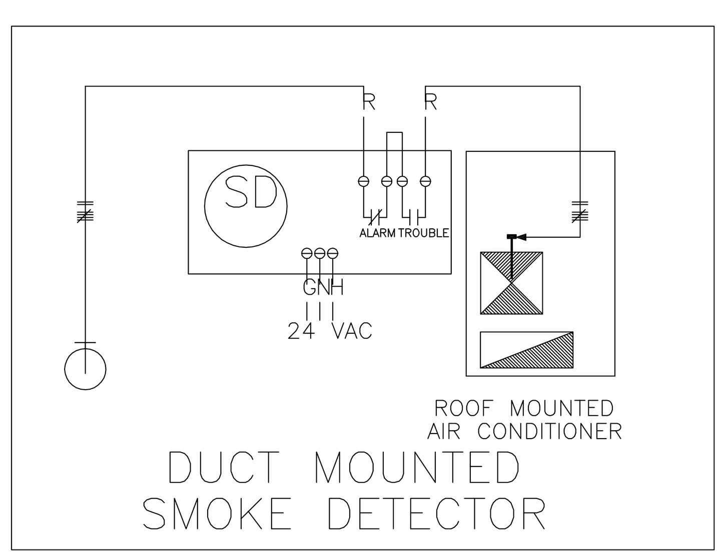

DUCT MOUNTED
SMOKE DETECTOR

PRIOR TO MECHANICAL PERMIT FINAL A SMOKE DETECTOR SHUT-OFF TEST WILL BE PERFORMED

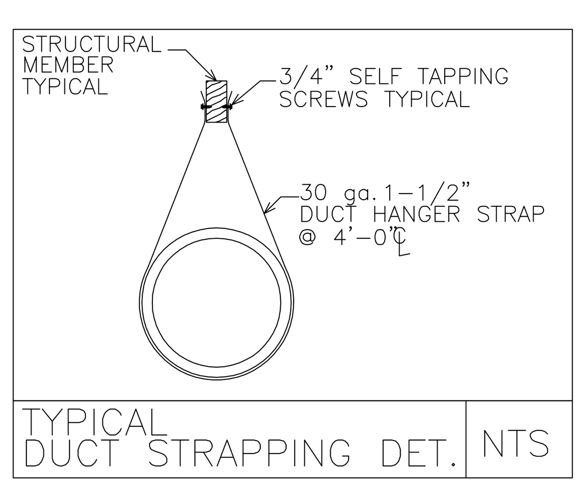

TYPICAL
DUCT STRAPPING DET. | NTS

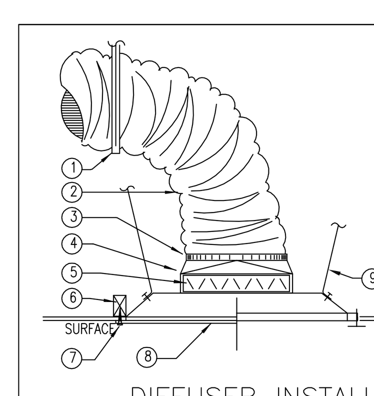

DIFFUSER INSTALLATION (2)

AIR QUANTITIES

AIR QUANTITIES AT REGISTERS AND DIFFUSERS (APPROX.) FOR PRESSURE AND VELOCITY VERIFICATION PER CMC 601.2

TERMINAL DUCT DIAMETER			
DIAMETER	CFM	DIAMETER	CFM
6ø	N/A	10ø	400
7ø	150	12ø	600
8ø	200	14ø	900
9ø	300	16ø	1200

N

SCALE: 1/4" = 1'-0"

MECHANICAL PLAN

HARBISON INTERNATIONAL INC.
ENGINEERS – SURVEYORS – PLANNERS
2755 E. SHAW AVE., SUITE 101, FRESNO, CA 93710
PHONE: (559) 294-7485 FAX: (559) 294-7481

REGISTERED PROFESSIONAL ENGINEER – DALE H WINN – No. 23273 – Exp. 12-31-11 – CIVIL – STATE OF CALIFORNIA

This and all other project documents and all ideas, aesthetics and designs incorporated therein are instruments of service. All project documents are the registered property of Harbison International (HI) and cannot be lawfully used in whole or in part for any project or purpose except as described in the contractual agreement between HI and the Client. HI hereby gives formal notice that any such project document use, reproduction, or modification (misuse) is not only unlawful but also automatically binds all parties involved with misuse to fully indemnify and defend HI and HI's consultants to the maximum legal extent against all losses, demands, claims or liabilities arising directly or indirectly from project document misuse.

Project documents describe design intent of work and are not a representation of the as-built or existing conditions. HI and HI's consultants make no representations concerning the accuracy of documents and are not responsible for any discrepancies between project documents and the existing conditions.

PRINCE TRUCK STOP
NWC OF STATE ROUTE 99 &
STATE ROUTE 166 (MARICOPA HWY)
BAKERSFIELD, CA 93313

REVISIONS		
No.	Date	Description
–	–	–
–	–	–
–	–	–
–	–	–
–	–	–
–	–	–
–	–	–

Drawn: DWD
Checked: MAH
Approved: MIKE A. HAMZY
Project No: 09-208
Date: 06/16/2011

Title: MECHANICAL PLAN

Sheet No. M1.0

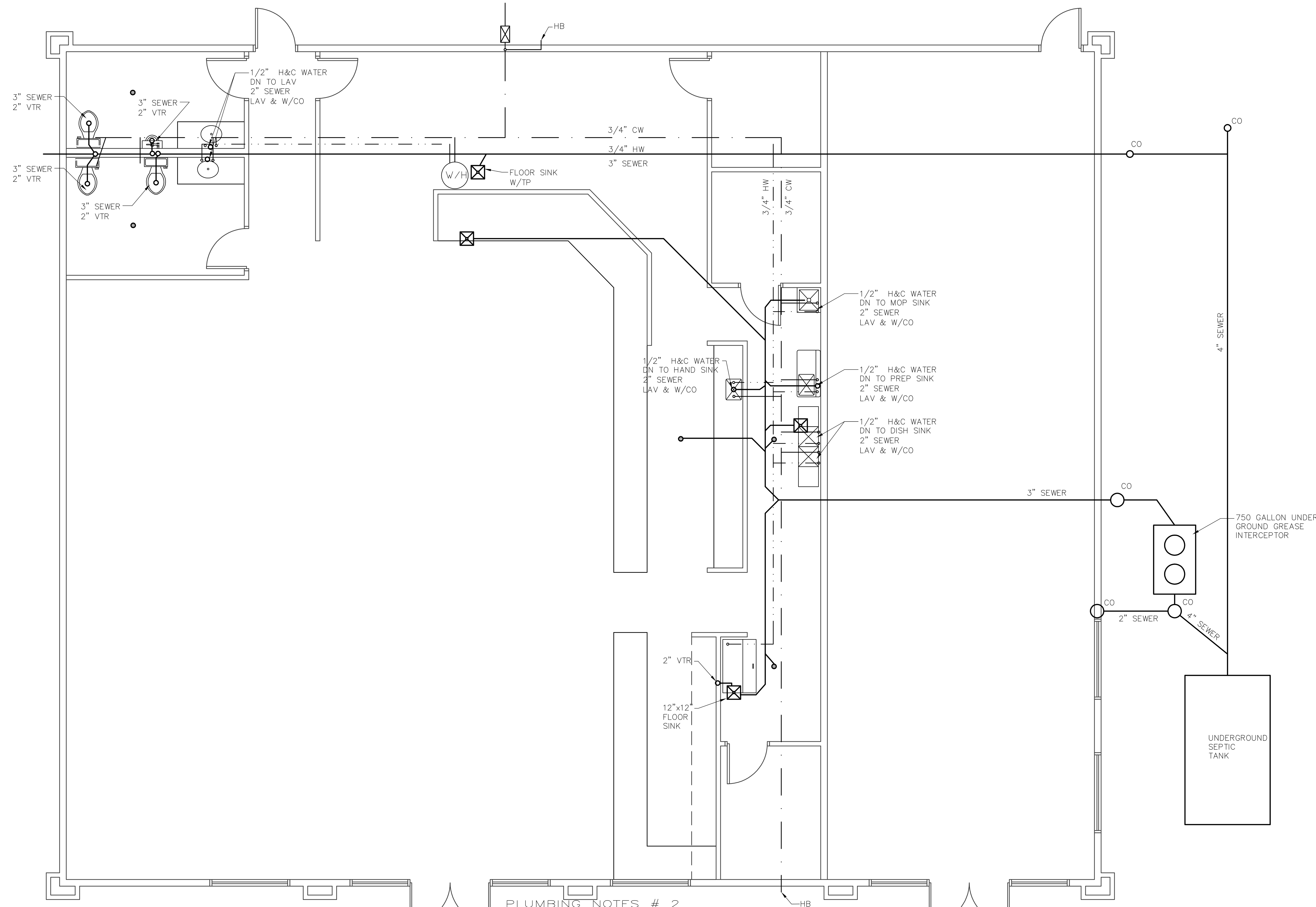

PLUMBING NOTES # 1

1 ALL WORK AND MATERIALS SHALL BE PERFORMED AND INSTALLED IN STRICT COMPLIANCE WITH THE LATEST EDITION OF THE CALIFORNIA PLUMBING CODE.
2 PLUMBING CONTRACTOR SHALL FURNISH ALL APPLICABLE PERMITS AND INSPECTION FEES AS REQUIRED BY THE LOCAL CODE.
3 OWNER SHALL PAY FOR ALL SEWER CONNECTION FEES, WATER METER AND TAP FEES, AND MAJOR FACILITIES CHARGES AS MAY BE REQUIRED BY LOCAL GOVERNING AUTHORITIES.
4 ROUGH IN AND CONNECT TO ALL EQUIPMENT AND FIXTURES REQUIRING GAS, WATER OR WASTE LINES AS INDICATED ON PLANS.
5 GAS MAIN AND METERS TO BE BY UTILITY COMPANY. VERIFY LOCATION.
6 PROVIDE CONDENSATE DRAIN TO EACH A/C UNIT TO APPROVED LOCATION AS PER CODE.
7 PROVIDE GAS SHUT-OFF VALVE CONSPICUOUSLY MARKED.
8 COMPLY WITH C.E.C. TITLE 24 REQUIREMENTS FOR MAXIMUM ALLOABLE FIXTURE FLOW RATES AT FAUCETS.
9 VERIFY ALL EXISTING JOB-SITE CONDITIONS AND OFF-SITE UTILITY CONDITIONS PRIOR TO BIDDING AND CONSTRUCTION.
10 PROVIDE CLEAN-OUTS ON ALL WASTE LINE TERMINATIONS, CHANGES OF DIRECTION, AND AT 100-FOOT INTERVALS.
11 WATER LINES: TYPE 'M' COPPER LINES ABOVE FIN. FLOOR;
12 INSULATE HOT WATER LINES WITH 3/4" THK. INSULATION PER TITLE 24 OF CAL. ENERGY REQUIREMENTS.
13 PROVIDE WATER HEATERS WITH TEMPERATURE RELIEF VALVE WITH A 3/4" DRAIN LINE TO THE EXTERIOR OF THE BUILDING AGA APPROVED. TURN
SEE 25 (DOWN NO LESS THAN 6" OR MORE THAN 24" ABOVE GRADE THRU WALLS AND UNDER SLABS PER LOCAL CODE REQUIREMENTS.
14 ALL FLOOR SINKS TO BE EASILY ACCESSIBLE FOR CLEANING AND INSPECTION PROVIDE TRAP PRIMER ON FLOOR SINKS UNDER COUNTER.
15 ALL HORIZONTAL DRAINS OVER 5' IN LENGTH SHALL BE PROVIDED WITH CLEAN-OUTS.
16 DRAINS FOR FLOOR DRAINS AND FLOOR SINKS TO BE TAKEN ABOVE FLOOR LINE BEFORE OFF-SETTING HORIZONTALLY.
17 PERMITS ARE REQUIRED FOR EACH PIECE OF FINISH EQUIPMENT.
18 WRAP TRAPS UNDER HANDICAPPED LAVATORY PER TITLE 24, C.E.C.
19 ANY FLOOR DRAIN OR FLOOR SINK SUBJECTED TO DRYING OUT SHALL BE
SEE 8 SERVED WITH A TRAP PRIMER.
20 USE EITHER PRESSURE BALANCE OR THERMOSTATIC MIXING VALVE AT EACH SINK OF HOT AND COLD RUNNING WATER.
21 WATER HEATER IS REQUIRED TO BE STRAPPED AT THE UPPER 1/3 OF THE TANK. 4" MIN. SHALL BE MAINTAINED BETWEEN THE STRAP AND W.H. CONTROLS.
22 PROVIDE NON-REMOVABLE TYPE BACKFLOW PREVENTION DEVICE ON ALL HOSE BIBBS.
23 INSTALL LOW-FLOW WATER CLOSETS WITH MAX. CAPACITY OF 1.6 GAL.
24 PROVIDE BACKFLOW PREVENTION DEVICE AT JANITORIAL SINK FAUCET.
25 EVAPORATIVE COOLERS MUST HAVE OVERFLOW DRAINS AND BACKDRAFT DAMPERS.
26 POTABLE WATER SUPPLY TO THE CARBONATOR TO BE PROTECTED BY EITHER AN AIR GAP OR A VENTED BACKFLOW PREVENTER (BP) PER CPC 603.4.13 OR CARBONATORS SHOULD BE EQUIPPED WITH BUILT IN BP.
27 CONDENSATE DRAINS ARE TO TERMINATE IN A LAVATORY TAIL PIECE, MOP SINK, OR INDIRECT WASTE RECEPTOR PER CPC815.1 & 807.2 . 3/4" MIN. TRAPPED AND 1" AIR TRAP INTO F.S. DRAIN FOR AIR COOLING COILS AND DRAIN OUTLET SIZE FOR EVAPORATIVE COOLERS AND OTHER EQUIPMENT.
28 PROVIDE SELF-CLOSING METERING FAUCET ON RESTROOM LAVATORY W/TEMPERATURE LIMIT STOPSET FOR 110'F MAX. PER TITLE 24. USE SIMMONS SCAT FAUCETS S-60-H.

PLUMBING FIXTURE SCHEDULE

SYM.	QTY.	FIXTURE	MANUFACTURER	CAT. NO.	REMARKS
F1	1	WTR CLOS.	KOHLER K-3496 OR AMERICAN STD.		ELONGATED BOWL, (ADA APP.) OPEN FRONT SEAT
F2	1	LAVATORY	KOHLER K-2005 KINGSTON OR AMERICAN STD.		WALL HUNG, SELF-CLOSING METERING FAUCET, #28/P1
F3	1	WTR. HTR.	AOESMITH PEC-30 ELECTRIC		4500 WATTS
F4	1	3-COMP SINK	GREEN WORLD TSA-3D1		
F5	1	MOP SINK	GREEN WORLD TSA-1-MOP	7692.049 8379.018 RIM GUARD	OR FLOOR MOUNTED FLAT-TSB-100W/DIAL-ESE
F6	1	HAND SINK	GREEN WORLD TSS-1-H		
F7	3	FLOOR DRAIN	J.R. SMITH		
F8	6	FLOOR SINK	J.R. SMITH		
F8	1	URINAL*	ZURN/TOTO	25750	TOTO 8 PSI, ADA HT.

*WATERLESS OPTION USE KOHLER STEWARD WATERLESS W/3"ø DRAIN LINE

PLUMBING NOTES # 2

1. DRAWINGS SHALL BE CONSIDERED DIAGRAMATIC ONLY. VERIFY EXACT LOCATIONS AND ELEVATIONS OF ALL UTILITIES PRIOR TO TRENCHING OR INSTALLATIONS OF PIPING.
2. ALL PLUMBING WORK SHALL COMPLY WITH THE LATEST C.P.C. REQUIREMENTS.
3. PLUMBING CONTRACTOR SHALL SUBMIT ISOMETRIC SHOP DRAWINGS FOR ARCHITECT'S APPROVAL BEFORE BEGINNING INSTALLATION.
4. ANY PLANS SUBMITTED FOR RESTAURANT USE SHALL BE APPROVED BY THE HEALTH DEPARTMENT PRIOR TO PLUMBING APPROVAL.
5. ALL PLUMBING FIXTURES SHALL MEET STATE OF CALIFORNIA HANDICAPPED REQUIREMENTS.
6. ALL WATER CLOSETS FOR PUBLIC USE SHALL BE ELONGATED BOWLS WITH OPEN FRONT SEAT (UPC#901.). TRIP LEVERS SHALL BE MOUNTED ON WIDE SIDE OF DISABLED WC.
7. TOILET ROOM FLOORS SHALL HAVE A SMOOTH HARD NON-ABSORBENT SURFACE WHICH EXTENDS UPWARD ONTO THE WALLS AT LEAST 5" AND BE COVED AT THE JUNCTURE OF THE FLOOR AND WALL WITH A 3/8" MINIMUM RADIUS COVING.
8. INSULATE ALL WATER HEATERS PER TITLE 24 C.E.C.
9. HOT WATER AND DRAIN PIPES UNDER LAVATORIES SHALL BE INSULATED TO COMPLY WITH TITLE 24 HANDICAPPED REQUIREMENTS. PLUMBING SHALL BE LOCATED WITHIN THE OCCUPANCY OR
10. ONLY FERROUS AND COPPER PIPES SHALL PENETRATE FIRE RESISTIVE ASSEMBLIES. ALL OF THE PENETRATIONS SHALL BE FIRE-STOPPED WITH AN APPROVED LISTED SYSTEM.
11. AREA SEPARATION WALLS OR OTHER REQUIRED FIRE WALLS. (UPC #505)
12. ALL PENETRATIONS THROUGH FIRE RATED WALL OR CEILINGS WHICH EXCEED 1/4" AROUND WHATEVER MATERIAL GOES THROUGH THE WALL OR CEILING SHALL BE CAULKED WITH AN APPROVED FIRE CAULKING.
13. ALL PLUMBING VENTS THROUGH ROOF SHALL BE 10' MIN. AWAY FROM FRESH AIR INTAKE, AIR CONDITIONING UNITS, EVAP. COOLERS, WINDOWS, FROM PROPERTY LINE, ETC. (UPC #506)
14. PROVIDE AN APPROVED PRESSURE REGULATOR WHERE LOCAL WATER PRESSURE EXCEEDS 80 PSI.
15. VENT PIPES SHALL EQUAL AGGREGATE CROSS SECTIONAL AREA WHICH SHALL NOT BE LESS THAN THAT OF THE LARGEST REQUIRED BUILDING SEWER, AS DETERMINED FROM TABLE 4-3 (UPC #504).
17. ON-SITE HORIZONTAL SOIL LINE TO RUN IN PRACTICAL ALIGNMENT AND SLOPE (1/8" PER FT. MIN.). PLUMBING CONTRACTOR SHALL PROVIDE THE PLUMBING INSPECTOR WITH A TRANSIT TO CHECK FALL. VERIFY PROPOSED FALL WITH ADMINISTRATIVE AUTHORITY PRIOR TO COMMENCING WORK.
18. ALL FLOOR DRAINS, FLOOR SINKS, AND SIMILAR FIXTURES SUBJECT TO INFREQUENT USE SHALL BE PROVIDED WITH A TRAP PRIMER AS PER CPC 1007.
19. PROVIDE WATER HAMMER ARRESTER AT C.W. SUPPLY HEADER SERVING EACH RESTROOM(S) SIZED FOR PROPER PRESSURE AND NUMBER OF UNITS. ALSO PROVIDE SHUT-OFF VALVE AND ACCESS DOOR (FLUSH VALVE ONLY).
20. ALL ON-SITE WATER PIPE 4"ø AND LARGER SHALL BE CHLORINATED AND TESTED BY AN APPROVED AGENCY AND THE RESULTS SUBMITTED TO THE CITY GOVERNING INSPECTION DIVISION.
21. AUTOMATIC GAS VALVE IN THE GAS LINE SUPPLYING FUEL TO ALL COOKING EQUIPMENT SHALL BE ACCESSIBLE FOR SERVICING AND LABELED FOR LOCATION (UPC#1204). N/A
22. PROVIDE ANTI-SIPHON DEVICE AT ALL HOSE BIBBS.
23. ALL INTERIOR TYPE HOSE BIBBS SHALL BE EQUIPPED WITH APPROVED TYPE VACUUM BREAKERS PER UPC.
24. STORAGE TYPE WATER HEATERS AND STORAGE BACK-UP TANKS FOR SOLAR WATER HEATING SYSTEM SHALL BE FACTORY INSULATED OR EXTERNALLY WRAPPED IN FIELD TO SATISFY A THERMAL RESISTANCE OF R-12 OR GREATER.
25. ALL WATER HEATER P & T RELIEF LINES SHALL BE 3/4" TERMINATE TO THE OUTSIDE OF BUILDING AS PER CODE (UPC #1007).
26. ALL WATER HEATERS IN ATTICS SHALL BE EQUIPPED WITH AN APPROVED-TYPE PAN WITH A 3/4" DRAIN TO THE EXTERIOR OF THE BUILDING AT A CONSPICUOUS LOCATION.
27. PIPING IN UNCONDITIONED SPACE LEADING TO AND FROM WATER HEATER SHALL BE INSULATED WITH AN INSTALLED THERMAL RESISTANCE OF R-4 OR GREATER FOR THE 5' OF PIPE CLOSEST TO THE WATER HEATER, OR WHATEVER SHORT LENGTH IS IN THE UNCONDITIONED SPACE.
28. ALL PLUMBING APPLIANCES AND EQUIPMENT LISTED IN TABLE 2-53G SHALL BE CERTIFIED BY THE CALIFORNIA ENERGY COMMISSION TO COMPLY WITH THE EFFICIENCY STANDARS FOR SUCH APPLIANCES.
29. CHECK WITH THE WATER DEPARTMENT FOR BACKFLOW PREVENTION DEVICE REQUIREMENTS AND LOCATIONS.
30. ALL EXTERIOR HOSE BIBBS SHALL BE KEYED TO PREVENT UNWARRANTED USE.
31. INSTALL APPROVED EXPANSION DEVICES ON ALL HOT WATER SUPPLY AND RETURN LINES AS REQUIRED.
32. PROVIDE LIGHT FIXTURE, SWITCH AND ELECTRICAL OUTLET IN ATTIC TO SERVICE WATER HEATER.

N

SCALE: 1/4" = 1'-0"

PLUMBING PLAN

This and all other project documents and all ideas, aesthetics and designs incorporated therein are instruments of service. All project documents are the registered property of Harbison International (HI) and cannot be lawfully used in whole or in part for any project or purpose except as described in the contractual agreement between HI and the Client. HI hereby gives formal notice that any such project document use, reproduction, or modification (misuse) is not only unlawful but also automatically binds all parties involved with misuse to fully indemnify and defend HI and HI's consultants to the maximum legal extent against all losses, demands, claims or liabilities arising directly or indirectly from project document misuse.

Project documents describe design intent of work and are not a representation of the as-built or existing conditions. HI and HI's consultants make no representations concerning the accuracy of documents and are not responsible for any discrepancies between project documents and the existing conditions.

REGISTERED PROFESSIONAL ENGINEER
DALE H WINN
No. 23273
Exp. 12-31-11
CIVIL
STATE OF CALIFORNIA

HARBISON INTERNATIONAL INC.
ENGINEERS – SURVEYORS – PLANNERS
2755 E. SHAW AVE., SUITE 101, FRESNO, CA 93710
PHONE: (559) 294-7485 FAX: (559) 294-7481

PRINCE TRUCK STOP
NWC OF STATE ROUTE 99 &
STATE ROUTE 166 (MARICOPA HWY)
BAKERSFIELD, CA 93313

REVISIONS		
No.	Date	Description
–	–	–
–	–	–
–	–	–
–	–	–
–	–	–
–	–	–
–	–	–

Drawn: DWD
Checked: MAH
Approved: MIKE A. HAMZY
Project No: 09-208
Date: 06/16/2011

Title: PLUMBING PLAN

Sheet No. P1.0

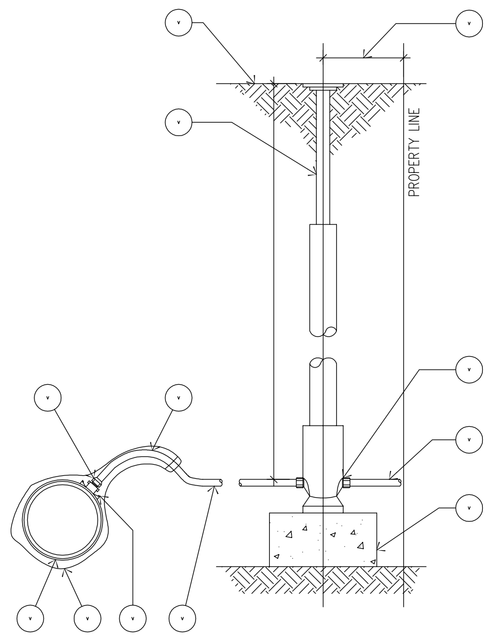

1. LOCATE NEW CURB BOX 12" ON STREET SIDE OF PROPERTY LINE EXCEPT WHERE SIDEWALK IS ON PROPERTY LINE. THEN LOCATE CURB STOP 12" BEHIND BACK OF WALK.
2. FINISH GRADE ELEVATION. ALL DISTURBED LANDSCAPED AREAS SHALL BE SODDED, OR REPLACED IN KIND.
3. CURB STOP ADJUSTABLE BOX ARCH PATTERN WITH FOOTPIECE.
4. CORPORATION STOP.
5. 8 MIL. POLYETHYLENE WRAP. INSTALLED PER MANUFACTURER'S RECOMMENDATIONS.
6. PROVIDE GOOSENECK FOR EXPANSION AND CONTRACTION.
7. TYPE 'K' COPPER TUBING, CONTINUOUS.
8. ALL BRASS STRAP AND SADDLE.
9. WATER MAIN.
10. CURB STOP WITH FLARE CONNECTION ON STREET SIDE.
11. SERVICE LINE EXTENSION TO HOUSE OR EXTENSION METER AND VAULT, METER INSTALLATION BY OTHERS. USE DIELECTRIC UNION IF GALVANIZED IRON PIPE.
12. SET CURB STOP ON MASONRY SUPPORT.

WATER SERVICE CONNECTION DETAIL

NOT TO SCALE

15A-4025

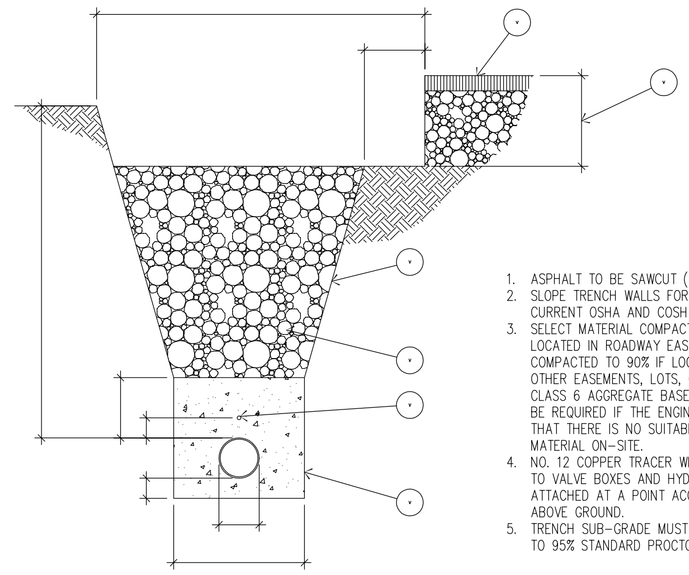

1. ASPHALT TO BE SAWCUT (TYPICAL).
2. SLOPE TRENCH WALLS FOR SAFETY PER CURRENT OSHA AND COSH REQUIREMENTS.
3. SELECT MATERIAL COMPACTED TO 95% IF LOCATED IN ROADWAY EASEMENT. COMPACTED TO 90% IF LOCATED IN OTHER EASEMENTS, LOTS, OR SPACES. CLASS 6 AGGREGATE BASE COURSE WILL BE REQUIRED IF THE ENGINEER DETERMINES THAT THERE IS NO SUITABLE SELECT MATERIAL ON-SITE.
4. NO. 12 COPPER TRACER WIRE EXTENDED TO VALVE BOXES AND HYDRANTS, AND ATTACHED AT A POINT ACCESSIBLE FROM ABOVE GROUND.
5. TRENCH SUB-GRADE MUST BE COMPACTED TO 95% STANDARD PROCTOR.

NOTES: A. PAVEMENT REPLACEMENT SHALL MEET EXISTING THICKNESSES AND KIND WITH THE FOLLOWING MINIMUMS: ASPHALT SURFACING = 3" MIN., AGGREGATE BASE COURSE = 15" MINIMUM.
B. IF WATER MAIN IS NOT UNDER ROAD SURFACE, REPLACE TOP ONE FOOT OF TRENCH WITH TOPSOIL AND REVEGETATE.

TRENCH CROSS SECTION

NOT TO SCALE

15A-4029

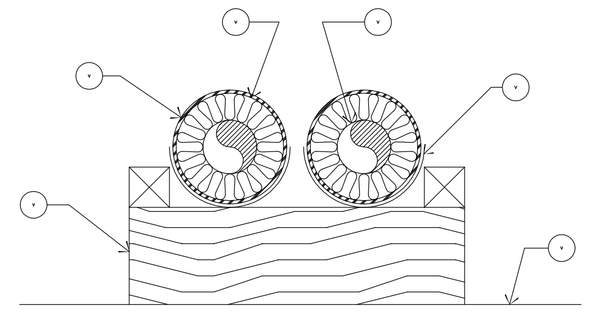

1. ALUMINUM ALL WEATHER JACKET.
2. 4 X 4 REDWOOD BLOCK.
3. ROOF.
4. PVC SADDLE, 2'-0" LONG.
5. PIPING.
6. 1" FIBERGLASS INSULATION.

PIPES ON ROOF

3" = 1'-0"

15A-4009

WASTE UNIT SCHEDULE					
FIXTURE	QUANTITY	UNITS EA.	TTL. UNITS	WASTE	VENT
WATER CLOS.	1	4	4	3"	2"
LAVATORY	1	1	1	2"	1-1/2"
URINAL	1	2	2	2"	1-1/2"
MOP SINK	1	3	3	2"	1-1/2"
3-COMP SINK	1	3	3	2"	1-1/2"
FLR. DRAIN	3	1	3	2"	1-1/2"
FLR. SINK	6	1	6	2"	1-1/2"
HAND SINK	1	1	1	2"	1-1/2"
VEG SINK	1	3	3	2"	1-1/2"
TOTAL UNITS			26		

WATER UNIT SCHEDULE					
FIXTURE	QUANTITY	UNITS EA.	TTL. UNITS	C.W.	H.W.
WATER CLOS.	1	2.5	2.5	1/2"	-
LAVATORY	1	1	1	1/2"	1/2"
URINAL	1	4	4	3/4"	-
HAND SINK	1	1	1	1/2"	1/2"
MOP SINK	1	3	3	1/2"	1/2"
3-COMP SINK	1	3	3	1/2"	1/2"
ICE MAKER	1	1	1	1/2"	-
SLUSHY	1	1	1	3/8"	-
COFFEEMAKER	1	1	1	3/8"	-
CAPPUCINO	1	1	1	3/8"	-
TEA MAKER	1	1	1	3/8"	-
SODA MACHINE	2	1	2	3/8"	-
HOSE BIBB	1	2.5	2.5	3/4"	-
TEA MAKER	1	1	1	1/2"	-
VEG. SINK	1	2	2	1/2"	1/2"
AIR & WATER	1	1	1	1/2"	-
C-STORE TOTAL UNITS			28		

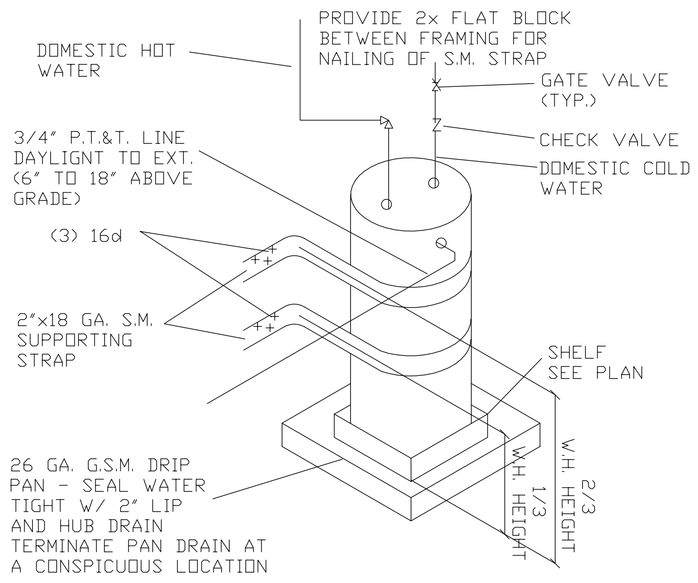

10 ELECTRIC WATER HEATER

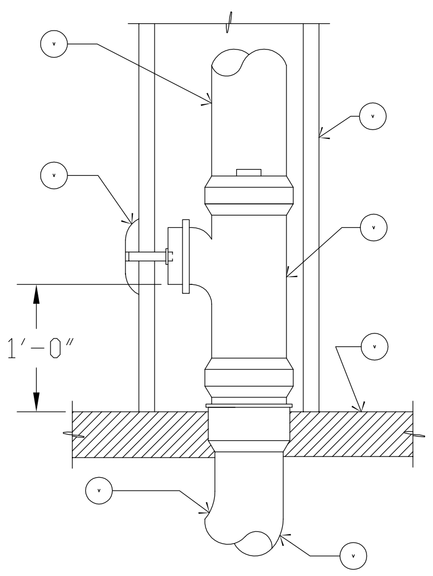

1. MAY EXTEND AS A WASTE OR VENT.
2. WALLCOVER AND SCREW.
3. 1/8" CAST IRON BEND.
4. BALANCE OR PIPING SAME AS CLEANOUT TO GRADE.
5. FLOOR.
6. PLUGGED TEE WITH CLEANOUT.
7. WALL.

WALL CLEANOUT

N.T.S.

15A-4017

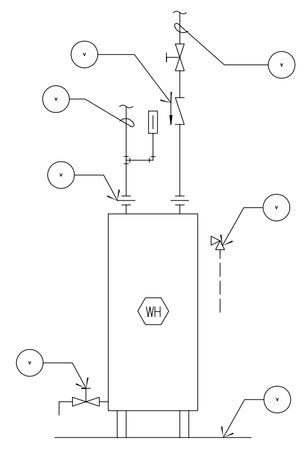

1. DRILL 1/8" HOLE IN FLAPPER.
2. HOT WATER OUTLET.
3. DIELECTRIC UNION, TYPICAL.
4. DRAIN VALVE, PIPE TO 6" A.F.F.
5. FLOOR.
6. ASME PRESSURE RELIEF VALVE, PIPE FULL SIZE TO 6" A.F.F.
7. COLD WATER INLET.

WATER HEATER DETAIL

N.T.S.

15A-4023

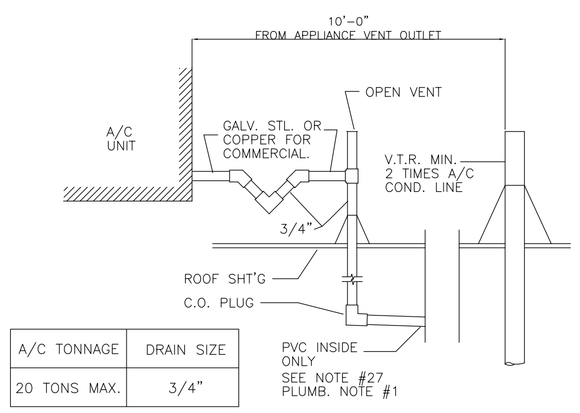

A/C TONNAGE	DRAIN SIZE
20 TONS MAX.	3/4"

1 A/C CONDENSATE DRAIN DETAIL

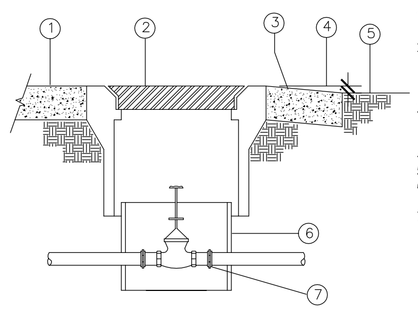

1. FINISHED FLOOR OR SIDEWALK
2. PRE-CAST CONCRETE BOX WITH CAST IRON COVER. LABEL THE COVER "WATER".
3. 18" x 18" CAST CONCRETE AROUND IN UNPAVED AREA.
4. 1/2" SLOPE
5. FINISHED GRADE
6. VIT CLAY OR PVC EXTENSION SLEEVE
7. UNION

2 P1 WATER SHUTOFF

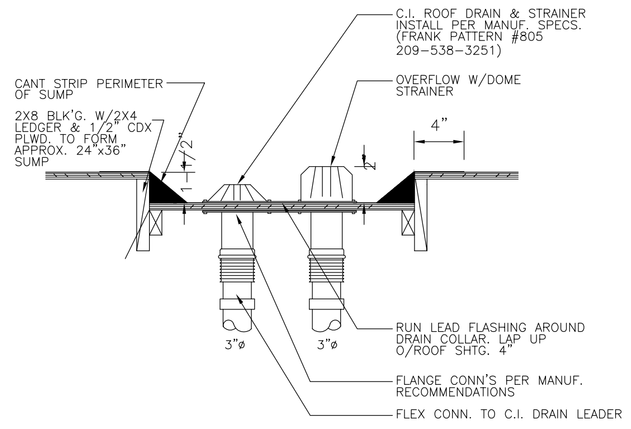

3 TYPICAL ROOF DRAIN

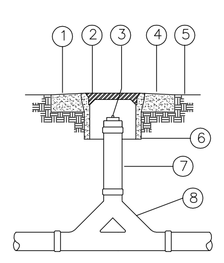

1. 24" x 24" x 6" DEEP CAST CONCRETE IN UNPAVED AREA.
2. LABEL COVER "SEWER"
3. CLEANOUT PLUG.
4. 1/2" SLOPE
5. FINISHED GRADE
6. PRE-CAST CONCRETE BOX WITH CAST IRON COVER
7. EXTENSION
8. TWO WAY COMBINATION

3 P1 TWO WAY CLEANOUT

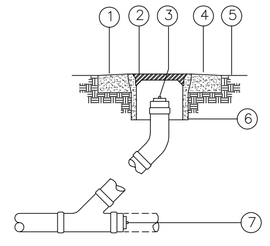

1. 24" x 24" x 6" DEEP CAST CONCRETE IN UNPAVED AREA.
2. LABEL COVER "SEWER"
3. CLEANOUT PLUG.
4. 1/2" SLOPE
5. FINISHED GRADE
6. PRE-CAST CONCRETE BOX WITH CAST IRON COVER
7. PLUGGED WYE AT END OF PLUG

4 P1 SURFACE CLEANOUT (COTG)

PLUMBING DETAILS

This and all other project documents and all ideas, aesthetics and designs incorporated therein are instruments of service and shall remain the property of Harbison International (HI) and cannot be lawfully used in whole or in part for any project or purpose except as described in the contractual agreement between HI and the Client. HI retains all rights under statutory and common law, including but not limited to, copyright. Unauthorized use of these documents (including but not limited to preparation of derivative plans) is prohibited and will be considered willful infringement. Client agrees to fully indemnify and defend HI and HI's consultants, to the maximum legal extent against all losses, damages, claims or liabilities arising directly or indirectly from project document misuse.

Project documents describe design intent of work, and are not a representation of the final as-built conditions of the project. Client agrees to hold HI harmless from claims concerning the accuracy of documents and are not responsible for any discrepancies between project documents and the existing conditions.

REGISTERED PROFESSIONAL ENGINEER STATE OF CALIFORNIA — DAVID W. DWINNELL — No. 23273 — Exp. 12-31-11 — CIVIL

HARBISON INTERNATIONAL INC.
ENGINEERS - SURVEYORS - PLANNERS
2755 E. SHAW AVE., SUITE 101, FRESNO, CA 93710
PHONE: (559) 294-7485 FAX: (559) 294-7481

PRINCE TRUCK STOP
NWC OF STATE ROUTE 99 & STATE ROUTE 166 (MARICOPA HWY)
BAKERSFIELD, CA 93313

REVISIONS

No.	Date	Description

Drawn: DWD
Checked: MAH
Approved: MIKE A. HAMZY

Project No: 09-208
Date: 06/16/2011

Title: PLUMBING DETAILS

Sheet No. P1.1

BUILDING ENERGY ANALYSIS REPORT

PROJECT:

Prince Truck Stop
NW Corner State Rt 166 Maricopa Hwy and Hwy 99
Bakersfield, CA 93313

Project Designer:

Harbison International, Inc.
2755 E. Shaw Avenue, Suite 101
Fresno, CA 93710
559-294-7485

Report Prepared by:

Michael L. Mideiros
Home Design Service
1569 Hillsboro Ave
Madera, CA 93637-8641
559-675-8097

Job Number:

Prince Truck Stop

Date:

6/7/2011

The EnergyPro computer program has been used to perform the calculations summarized in this compliance report. This program has approval and is authorized by the California Energy Commission for use with both the Residential and Nonresidential 2008 Building Energy Efficiency Standards.

This program developed by EnergySoft, LLC – www.energysoft.com.

TABLE OF CONTENTS

Cover Page	1
Table of Contents	2
Nonresidential Performance Title 24 Forms	3
Form ENV-MM Envelope Mandatory Measures	21
Form LTG-MM Lighting Mandatory Measures	22
Form MECH-MM Mechanical Mandatory Measures	23
HVAC System Heating and Cooling Loads Summary	24

PERFORMANCE CERTIFICATE OF COMPLIANCE (Part 1 of 3) PERF-1C

Project Name	Climate Zone	Total Cond. Floor Area	Addition Floor Area	Date
Prince Truck Stop				*6/7/2011*
NW Corner State Rt 166 Maricopa Hwy and Hwy 99	*CA Climate Zone 13*	*3,717*	*n/a*	

GENERAL INFORMATION

Building Type:	☑ Nonresidential	☐ High-Rise Residential	☐ Hotel/Motel Guest Room
	☐ Relocatable - indicate	☐ specific climate zone	☐ all climates
Phase of Construction:	☑ New Construction	☐ Addition	☐ Alteration

STATEMENT OF COMPLIANCE

This certificate of compliance lists the building features and specifications needed to comply with Title 24, Parts 1 and 6 of the California Code of Regulations. This certificate applies only to a Building using the performance compliance approach.

The documentation author hereby certifies that the documentation is accurate and complete.

Documentation Author

Name	*Michael L. Mideiros*	Signature	
Company	*Home Design Service*	Date	*6/7/2011*
Address	*1569 Hillsboro Ave*	Phone	*559-675-8097*
City/State/Zip	*Madera, CA 93637-8641*		

The Principal Designer hereby certifies that the proposed building design represented in this set of construction documents is consistent with the other compliance forms and worksheets, with the specifications, and with any other calculations submitted with this permit application. The proposed building has been designed to meet the energy efficiency requirements contained in sections 110, 116 through 118, and 140 through 149 of Title 24, Part 6. Please check one:

ENV.	LTG.	MECH.	
☐	☐	☐	I hereby affirm that I am eligible under the provisions of Division 3 of the Business and Professions Code to sign this document as the person responsible for its preparation; and that I am licensed in the State of California as a civil engineer, mechanical engineer, electrical engineer, or I am a licensed architect.
☐	☐	☐	I affirm that I am eligible under the provisions of Division 3 of the Business and Professions Code by section 5537.2 or 6737.3 to sign this document as the person responsible for its preparation; and that I am a licensed contractor performing this work.
☐	☐	☐	I affirm that I am eligible under Division 3 of the Business and Professions Code to sign this document because it pertains to a structure or type of work described as exempt pursuant to Business and Professions Code Sections 5537, 5538 and 6737.1.

Principal Envelope Designer

Name	*Dale Winn, P.E.*	Signature	
Company	*Harbison International, Inc.*	Date	
Address	*2755 E. Shaw Avenue, Suite 101*	License #	
City/State/Zip	*Fresno, CA 93710*	Phone	*559-294-7485*

Principal Mechanical Designer

Name	*Dale Winn, P.E.*	Signature	
Company	*Harbison International, Inc.*	Date	
Address	*2755 E. Shaw Avenue, Suite 101*	License #	
City/State/Zip	*Fresno, CA 93710*	Phone	*559-294-7485*

Principal Lighting Designer

Name	*Dale Winn, P.E.*	Signature	
Company	*Harbison International, Inc.*	Date	
Address	*2755 E. Shaw Avenue, Suite 101*	License #	
City/State/Zip	*Fresno, CA 93710*	Phone	*559-294-7485*

INSTRUCTIONS TO APPLICANT COMPLIANCE & WORKSHEETS (check box if worksheets are included)

☑	ENV-1C	Certificate of Compliance. Required on plans.	☑	MECH-1C	Certificate of Compliance. Required on plans.
☑	LTG-1C	Certificate of Compliance. Required on plans.	☑	MECH-2C	Air/Water Side/Service Hot Water & Pool Requirements.
☐	LTG-2C	Lighting Controls Credit Worksheet.	☑	MECH-3C	Mechanical Ventilation and Reheat.
☐	LTG-3C	Indoor Lighting Power Allowance.	☑	MECH-5C	Mechanical Equipment Details.

PERFORMANCE CERTIFICATE OF COMPLIANCE (Part 2 of 3) PERF-1C

Project Name: *Prince Truck Stop*

Date: *6/7/2011*

ANNUAL TDV ENERGY USE SUMMARY (kBtu/sqft-yr)

Energy Component	Standard Design	Proposed Design	Compliance Margin
Space Heating	0.69	7.17	-6.49
Space Cooling	222.08	196.35	25.73
Indoor Fans	30.42	32.22	-1.80
Heat Rejection	0.00	0.00	0.00
Pumps & Misc.	0.00	0.00	0.00
Domestic Hot Water	31.10	30.32	0.79
Lighting	162.93	114.66	48.27
Receptacle	80.80	80.80	0.00
Process	80.80	80.80	0.00
Process Lighting	0.00	0.00	0.00
TOTALS	608.81	542.31	66.50
Percent better than Standard		10.9 %	(12.6 % excluding process)

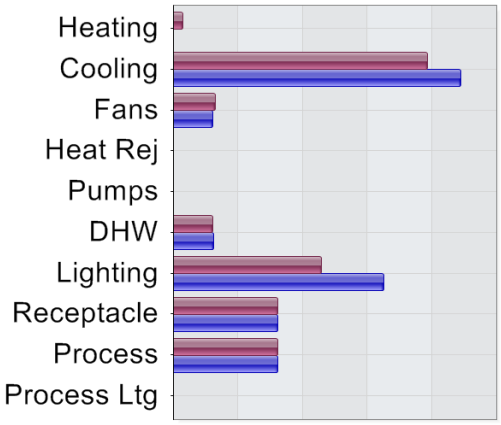

BUILDING COMPLIES

GENERAL INFORMATION

Building Orientation	(S) 180 deg	Conditioned Floor Area	3,717	sqft.
Number of Stories	1	Unconditioned Floor Area	1,197	sqft.
Number of Systems	2	Conditioned Footprint Area	3,717	sqft.
Number of Zones	2	Natural Gas Available On Site	Yes	

	Orientation	Gross Area		Glazing Area		Glazing Ratio
Front Elevation	(S)	741	sqft.	213	sqft.	28.7 %
Left Elevation	(W)	819	sqft.	0	sqft.	0.0 %
Rear Elevation	(N)	741	sqft.	0	sqft.	0.0 %
Right Elevation	(E)	0	sqft.	0	sqft.	0.0 %
Total		2,301	sqft.	213	sqft.	9.3 %
Roof		3,717	sqft.	0	sqft.	0.0 %

	Standard		Proposed		
Prescriptive Lighting Power Density	1.600	W/sqft.	1.126	W/sqft.	Prescriptive Values for Comparison only. See LTG-1C for allowed LPD.
Prescriptive Envelope TDV Energy	72,331		130,855		

Remarks:

PERFORMANCE CERTIFICATE OF COMPLIANCE (Part 3 of 3) PERF-1C

Project Name: *Prince Truck Stop*

Date: *6/7/2011*

ZONE INFORMATION

System Name	Zone Name	Occupancy Type	Floor Area (sqft.)	Inst. LPD (W/sf)[1]	Ctrl. Credits (W/sf)[2]	Allowed LPD Area (W/sf)[3]	Allowed LPD Tailored (W/sf)[4]	Proc. Loads (W/sf)
Minimart HVAC Systems	*Minimart*	*Retail Sales, Wholesale*	*3,717*	*1.126*				*1.000*
	Future Tenant Lease	*Tenant Lease Space*	*1,197*	*0.000*				

Notes: 1. See LTG-1C (items marked with asterisk, see LTG-1-C by others) 2. See LTG-2C 3. See LTG-3C (by others) 4. See LTG-4C

Items above require special documentation

EXCEPTIONAL CONDITIONS COMPLIANCE CHECKLIST

The local enforcement agency should pay special attention to the items specified in this checklist. These items require special written justification and documentation, and special verification to be used with the performance approach. The local enforcement agency determines the adequacy of the justifications, and may reject a building or design that otherwise complies based on the adequacy of the special justification and documentation submitted.

The HVAC System Minimart HVAC Systems incorporates HERS verified Duct Leakage. Target leakage is calculated and documented on the MECH-4-A.

The exceptional features listed in this performance approach application have specifically been reviewed. Adequate written justification and documentation for their use have been provided by the applicant.

Authorized Signature or Stamp _____

CERTIFICATE OF COMPLIANCE AND FIELD INSPECTION ENERGY CHECKLIST

(Part 1 of 3) **ENV-1C**

Project Name	Date
Prince Truck Stop	*6/7/2011*

Project Address	Climate Zone	Total Cond. Floor Area	Addition Floor Area
NW Corner State Rt 166 Maricopa Hwy and Hwy 99	*13*	*3,717*	*n/a*

GENERAL INFORMATION

Building Type: ☑ Nonresidential ☐ High-Rise Residential ☐ Hotel/Motel Guest Room

☐ Schools (Public School) ☐ Relocatable Public School Bldg. ☑ Conditioned Spaces ☐ Unconditioned Spaces

☐ Skylight Area for Large Enclosed Space ≥ 8000 ft^2 (If checked include the ENV-4C with submittal)

Phase of Construction: ☑ New Construction ☐ Addition ☐ Alteration

Approach of Compliance: ☐ Component ☑ Overall Envelope ☐ Unconditioned (file affidavit)

Front Orientation: N, E, S, W or in Degrees: *180 deg*

FIELD INSPECTION ENERGY CHECKLIST

OPAQUE SURFACE DETAILS | **INSULATION**

Tag/ID	Assembly Type	Area (ft^2)	Orientation N, E, S, W	U-Factor	Cavity R-Value	Exterior R-Value	Exterior Furring[3]	Interior R-Value	Interior Furring[3]	Joint Appendix 4	Condition Status	Pass	Fail[2]
1	*Wall*	*528*	*(S)*	*0.074*	*R-19*					*4.3.1-A5*	*New*	☐	☐
2	*Wall*	*819*	*(W)*	*0.074*	*R-19*					*4.3.1-A5*	*New*	☐	☐
3	*Wall*	*720*	*(N)*	*0.074*	*R-19*					*4.3.1-A5*	*New*	☐	☐
4	*Door*	*21*	*(N)*	*0.500*	*None*					*4.5.1-A4*	*New*	☐	☐
5	*Roof*	*3,717*	*(N)*	*0.059*	*R-19*					*4.2.2-A30*	*New*	☐	☐
6	*Slab*	*3,717*	*(N)*	*0.730*	*None*					*4.4.7-A1*	*New*	☐	☐
7	*Demising*	*819*	*(N)*	*0.074*	*R-19*					*4.3.1-A5*	*New*	☐	☐
												☐	☐
												☐	☐
												☐	☐

1. See Instructions in the Nonresidential Compliance Manual, page 3-96.
2. If Fail, then describe on Page 2 of the Inspection Checklist Form and take appropriate action to correct. A fail does not meet compliance.

FENESTRATION SURFACE DETAILS

Tag/ID	Fenestration Type	Area (ft^2)	Orientation N, E, S, W	Max U-Factor	U-Factor Source	Max (R)SHGC	SHGC Source	Overhang	Conditions Status	Pass	Fail[2]
1	*Window*	*86*	*(S)*	*1.190*	*Default*	*0.680*	*Default*	☐	*New*	☐	☐
2	*Window*	*32*	*(S)*	*1.190*	*Default*	*0.680*	*Default*	☑	*New*	☐	☐
3	*Window*	*56*	*(S)*	*1.250*	*Default*	*0.680*	*Default*	☑	*New*	☐	☐
4	*Window*	*8*	*(S)*	*1.190*	*Default*	*0.680*	*Default*	☑	*New*	☐	☐
5	*Window*	*32*	*(S)*	*1.190*	*Default*	*0.680*	*Default*	☑	*New*	☐	☐
								☐		☐	☐
								☐		☐	☐
								☐		☐	☐
								☐		☐	☐
								☐		☐	☐

1. See Instructions in the Nonresidential Compliance Manual, page 3-96.
2. If Fail then describe on Page 2 of the Inspection Checklist Form and take appropriate action to correct. Verify building plans if necessary.

CERTIFICATE OF COMPLIANCE AND FIELD INSPECTION ENERGY CHECKLIST

(Part 2 of 3) **ENV-1C**

Project Name	Date
Prince Truck Stop	*6/7/2011*

ROOFING PRODUCT (COOL ROOFS)

(Note if the roofing product is not CRRC certified, this compliance approach cannot be used). Go to Overall Envelope Approach or Performance Approach.

CHECK APPLICABLE BOX BELOW IF EXEMPT FROM THE ROOFING PRODUCT "COOL ROOF" REQUIREMENTS:	Pass	Fail[1]	N/A
☐ Roofing compliance not required in Climate Zones 1 and16 with a Low-Sloped. 2:12 pitch or less.	☐	☐	☐
☐ Roofing compliance not required in Climate Zone 1 with a Steep-Sloped with less than 5 lb/ft^2. Greater than 2:12 pitch.	☐	☐	☐
☐ Low-sloped Wood framed roofs in Climate Zones 3 and 5 are exempted, solar reflectance and thermal emittance or SRI that have a U-factor of 0.039 or lower. See Opaque Surface Details roof assembly, Column H of ENV-2C.	☐	☐	☐
☐ Low-sloped Metal building roofs in Climate Zone 3 and 5 are exempted, solar relectance and thermal emittance or SRI that have a U-factor of 0.048 or lower. See Opaque Surface Details roof assembly below, Column H of ENV-2C.	☐	☐	☐
☐ The roof area covered by building integrated photovoltaic panels and building integrated solar thermal panels are exempted. Solar reflectance and thermal emittance or SRI, see spreadsheet calculator at www.energy.ca.gov/title24/	☐	☐	☐
☐ Roof constructions that have thermal mass over the roof membrane with a weight of at least 25 lb/ft^2 are exempt from the Cool Roof criteria below.	☐	☐	☐
☐ High-rise residential buildings and hotels and motels with low-sloped roofs in Climate Zones 1 through 9, 12 and 16 are exempted from the low-sloped roofing criteria.	☐	☐	☐

1. If Fail then describe on this page of the Inspection Checklist Form and take appropriate action to correct. Verify building plans if necessary.

CRRC Product ID Number[1]	Roof Slope ≤ 2:12	Roof Slope > 2:12	Product Weight < 5lb/ft^2	Product Weight ≥ 5lb/ft^2	Product Type[2]	Aged Solar Reflectance[3]		Thermal Emmitance	SRI[5]	Pass	Fail[6]
	☐	☐	☐	☐		☐ [4]				☐	☐
	☐	☐	☐	☐		☐ [4]				☐	☐
	☐	☐	☐	☐		☐ [4]				☐	☐
	☐	☐	☐	☐		☐ [4]				☐	☐
	☐	☐	☐	☐		☐ [4]				☐	☐
	☐	☐	☐	☐		☐ [4]				☐	☐

1. The CRRC Product ID Number can be obtained from the Cool Roof Rating Council's Rated Product Directory at www.coolroofs.org/products/search.php
2. Indicate the type of product is being used for the roof top, i.e. single-ply roof, asphalt roof, metal roof, etc.
3. If the Aged Reflectance is not available in the Cool Roof Rating Council's Rated Product Directory then use the Initial Reflectance value from the same directory and use the equation $(0.2+0.7(\rho_{initial} - 0.2)$ to obtain a calculated aged value. Where **ρ** is the Initial Solar Reflectance from the Cool Roof Rating Council's Rated Product Directory.
4. Check box if the Aged Reflectance is a calculated value using the equation above.
5. The SRI value needs to be calculated from a spreadsheet calculator at http://www.energy.ca.gov/title24/
6. If Fail then describe on this page of the Inspection Checklist Form and take appropriate action to correct. Verify building plans if necessary.

To apply **Liquid Field Applied Coatings**, the coating must be applied across the entire roof surface and meet the dry mil thickness or coverage recommended by the coatings manufacturer and meet minimum performance requirements listed in §118(i)4. Select the applicable coating:

☐ Aluminum-Pigmented Asphalt Roof Coating ☐ Cement-Based Roof Coating ☐ Other _____

Discrepancies:

CERTIFICATE OF COMPLIANCE AND FIELD INSPECTION ENERGY CHECKLIST

(Part 3 of 3) **ENV-1C**

Project Name	Date
Prince Truck Stop	*6/7/2011*

Required Acceptance Tests

Designer:

This form is to be used by the designer and attached to the plans. Listed below is the acceptance test for Envelope Fenestrations system. The designer is required to check the acceptance tests and list all the fenestration products that require an acceptance test. If all the site-built fenestration of a certain type requires a test, list the different fenestration products and the number of systems. The NA7 Section in the Appendix of the Nonresidential Reference Appendices Manual describes the test. Since this form will be part of the plans, completion of this section will allow the responsible party to budget for the scope of work appropriately.

Enforcement Agency:

Systems Acceptance. Before Occupancy Permit is granted for a newly constructed building or space or whenever new fenestration is installed in the building or space shall be certified as meeting the Acceptance Requirements.
The ENV-2A form is not considered a complete form and is not to be accepted by the enforcement agency unless the boxes are checked and/or filled and signed. In addition, a Certificate of Acceptance forms shall be submitted to the enforcement agency that certifies plans, specifications, installation certificates, and operating and maintenance information meet the requirements of §10-103(b) of Title 24 Part 6. The field inspector must receive the properly filled out and signed forms before the building can receive final occupancy. A copy of the ENV-2A for each different fenestration product line must be provided to the owner of the building for their records.

Test Description		**ENV-2A**	**Test Performed By:**
Fenestration Products Name or ID Requiring Testing or Verification	Area of like Products	Building Envelope Acceptance Test	
Alum SG Tinted Fixed	*157*	☑	
Alum SG Tinted Glass Doors	*56*	☑	
		☐	
		☐	
		☐	
		☐	
		☐	
		☐	
		☐	
		☐	
		☐	
		☐	
		☐	
		☐	
		☐	
		☐	
		☐	
		☐	
		☐	
		☐	
		☐	
		☐	
		☐	
		☐	
		☐	
		☐	
		☐	
		☐	
		☐	

CERTIFICATE OF COMPLIANCE (Part 1 of 3) LTG-1C

Project Name	Date
Prince Truck Stop	*6/7/2011*

INDOOR LIGHTING SCHEDULE and FIELD INSPECTION ENERGY CHECKLIST

Installation Certificate, LTG-1- INST (Retain a copy and verify form is completed and signed.)	**Field Inspector** ☐
Certificate of Acceptance, LTG-2A and LTG-3A (Retain a copy and verify form is completed and signed.)	**Field Inspector** ☐

A separate Lighting Schedule Must Be Filled Out for Conditioned and Unconditioned Spaces Installed Lighting Power listed on this Lighting Schedule is only for:

☑ **CONDITIONED SPACE** ☐ **UNCONDITIONED SPACE**

☑ The actual indoor lighting power listed below includes all installed permanent and portable lighting systems in accordance with §146(a).

☑ Only for offices: Up to the first 0.2 watts per square foot of portable lighting shall not be required to be included in the calculation of actual indoor lighting power density in accordance with the Exception to §146(a). All portable lighting in excess of 0.2 watts per square foot is totaled below.

	Luminaire (Type, Lamps, Ballasts)	Installed Watts							
A	B	C	D	E		F	G	H	
				How wattage Was determined				Field Inspector[2]	
None or Item Tag	Complete Luminaire Description[1] (i.e, 3 lamp fluorescent troffer, F32T8, one dimmable electronic ballasts)		Watts per Luminaire[1]	CEC Default From NA8	According To §130 (d or e)	Number of Luminaires	Installed Watts (D X F)	Pass	Fail
A	*(3) 4 ft Fluorescent T8 (Tandem) Elec*		*93.0*	☑	☐	*45*	*4,185*	☐	☐
				☐	☐			☐	☐
				☐	☐			☐	☐
				☐	☐			☐	☐
				☐	☐			☐	☐
				☐	☐			☐	☐
				☐	☐			☐	☐
				☐	☐			☐	☐
				☐	☐			☐	☐
				☐	☐			☐	☐
				☐	☐			☐	☐
				☐	☐			☐	☐
				☐	☐			☐	☐
				☐	☐			☐	☐
				☐	☐			☐	☐
				☐	☐			☐	☐
				☐	☐			☐	☐
				☐	☐			☐	☐
				☐	☐			☐	☐
				☐	☐			☐	☐
						Installed Watts Page Total:	*4,185*		

Building total number of pages:		Installed Watts Building Total (Sum of all pages) Enter into LTG-1C Page 4 of 4	*4,185*

1. Wattage shall be determined according to Section 130 (d and e). Wattage shall be rating of light fixture, not rating of bulb.
2. If Fail then describe on Page 2 of the Inspection Checklist Form and take appropriate action to correct. Verify building plans if necessary.

CERTIFICATE OF COMPLIANCE (Part 2 of 3) LTG-1C

Project Name	Date
Prince Truck Stop	*6/7/2011*

INDOOR LIGHTING SCHEDULE and FIELD INSPECTION ENERGY CHECKLIST

Fill in controls for all spaces: a) area controls, b) multi-level controls, c) manual daylighting controls for daylit areas > 250 ft^2, automatic daylighting controls for daylit areas > 2,500 ft^2, d) shut-off controls, e) display lighting controls, f) tailored lighting controls – general lighting controlled separately from display, ornamental and display case lighting and g) demand responsive automatic controls for retail stores > 50,000 ft^2, in accordance with Section 131.

MANDATORY LIGHTING CONTROLS – FIELD INSPECTION ENERGY CHECKLIST

Type/ Description	Number of Units	Location in Building	Special Features	Field Inspector Pass	Field Inspector Fail
			☐	☐	☐
			☐	☐	☐
			☐	☐	☐
			☐	☐	☐
			☐	☐	☐
			☐	☐	☐
			☐	☐	☐
			☐	☐	☐
			☐	☐	☐
			☐	☐	☐
			☐	☐	☐
			☐	☐	☐
			☐	☐	☐
			☐	☐	☐
			☐	☐	☐
			☐	☐	☐
			☐	☐	☐
			☐	☐	☐
			☐	☐	☐
			☐	☐	☐
			☐	☐	☐
			☐	☐	☐
			☐	☐	☐
			☐	☐	☐

SPECIAL FEATURES INSPECTION CHECKLIST (See Page 2 of 4 of LTG-1C)

The local enforcement agency should pay special attention to the items specified in this checklist. These items require special written justification and documentation, and special verification. The local enforcement agency determines the adequacy of the justification, and may reject a building or design that otherwise complies based on the adequacy of the special justification and documentation submitted.

Field Inspector's Notes or Discrepancies:

CERTIFICATE OF COMPLIANCE (Part 3 of 3) LTG-1C

Project Name	Date
Prince Truck Stop	*6/7/2011*

CONDITIONED AND UNCONDITIONED SPACE LIGHTING MUST NOT BE COMBINED FOR COMPLIANCE

Indoor Lighting Power for Conditioned Spaces		Watts	Indoor Lighting Power for Unconditioned Spaces		Watts
Installed Lighting (from Conditioned LTG-1C, Page 2)		*4,185*	**Installed** Lighting (from Unconditioned LTG-1C, Page 2)		*0*
Lighting Control Credit Conditioned Spaces (from LTG-2C)	-	*0*	Lighting Control Credit Unconditioned Spaces (from LTG-2C)	-	*0*
Adjusted **Installed** Lighting Power	=	*4,185*	Adjusted **Installed** Lighting Power	=	*0*
Complies if **Installed ≤ Allowed**		↕	Complies if **Installed ≤ Allowed**		↕
Allowed Lighting Power Conditioned Spaces (from LTG-3C or PERF-1)		*4,185*	**Allowed** Lighting Power Unconditioned Spaces (from LTG-3C)		*1,796*

Required Acceptance Tests

Designer:

This form is to be used by the designer and attached to the plans. Listed below is the acceptance test for the Lighting system, **LTG-2A and LTG-3A**. The designer is required to check the acceptance tests and list all control devices serving the building or space shall be certified as meeting the Acceptance Requirements for Code Compliance. If all the lighting system or control of a certain type requires a test, list the different lighting and the number of systems. The NA7 Section in the Appendix of the Nonresidential Reference Appendices Manual describes the test. Since this form will be part of the plans, completion of this section will allow the responsible party to budget for the scope of work appropriately. **Forms can be grouped by type of Luminaire controlled.**

Enforcement Agency:

Systems Acceptance. Before Occupancy Permit is granted for a newly constructed building or space or when ever new lighting system with controls is installed in the building or space shall be certified as meeting the Acceptance Requirements.
The **LTG-2A and LTG-3A** forms are not considered complete forms and are not to be accepted by the enforcement agency unless the boxes are checked and/or filled and signed. In addition, a Certificate of Acceptance forms shall be submitted to the enforcement agency that certifies plans, specifications, installation certificates, and operating and maintenance information meet the requirements of §10-103(b) of Title 24 Part 6. The field inspector must receive the properly filled out and signed forms before the building can receive final occupancy. A copy of the **LTG-2A and LTG-3A** for each different lighting luminaire control(s) must be provided to the owner of the building for their records.

Luminaires Controlled				LTG-2A and LTG-3A
Equipment Requiring Testing	Description	Number of Luminaires controlled	Location	Controls and Sensors and Automatic Daylighting Controls Acceptance
				☐
				☐
				☐
				☐
				☐
				☐
				☐
				☐
				☐
				☐
				☐
				☐
				☐
				☐
				☐
				☐

CERTIFICATE OF COMPLIANCE and FIELD INSPECTION ENERGY CHECKLIST

(Part 1 of 4) **MECH-1C**

Project Name			Date
Prince Truck Stop			*6/7/2011*
Project Address	**Climate Zone**	**Total Cond. Floor Area**	**Addition Floor Area**
NW Corner State Rt 166 Maricopa Hwy and Hwy 99	*13*	*3,717*	*n/a*

GENERAL INFORMATION

Building Type:	☑	Nonresidential	☐	High-Rise Residential	☐	Hotel/Motel Guest Room	
☐ Schools (Public School)	☐	Relocatable Public School Bldg.	☑	Conditioned Spaces	☐	Unconditioned Spaces (affidavit)	
Phase of Construction:	☑	New Construction	☐	Addition	☐	Alteration	
Approach of Compliance:	☐	Component	☐	Overall Envelope TDV Energy	☐	Unconditioned (file affidavit)	
Front Orientation: N, E, S, W or in Degrees:	*180 deg*						

HVAC SYSTEM DETAILS

Equipment[2]	Inspection Criteria	FIELD INSPECTION ENERGY CHECKLIST Meets Criteria or Requirements: Pass	Fail – Describe Reason[2]
Item or System Tags (i.e. AC-1, RTU-1, HP-1)	*DHW Heater*	☐	☐
Equipment Type[3]:	*Gas Fired DHW Boiler*	☐	☐
Number of Systems	*1*	☐	☐
Max Allowed Heating Capacity[1]	*40,000 Btu/hr*	☐	☐
Minimum Heating Efficiency[1]	*0.59 EF*	☐	☐
Max Allowed Cooling Capacity[1]	*n/a*	☐	☐
Cooling Efficiency[1]	*n/a*	☐	☐
Duct Location/ R-Value	*n/a*	☐	☐
When duct testing is required, submit **MECH-4A** & **MECH-4-HERS**	*n/a*	☐	☐
Economizer	*n/a*	☐	☐
Thermostat	*n/a*	☐	☐
Fan Control	*n/a*	☐	☐

Equipment[2]	Inspection Criteria	FIELD INSPECTION ENERGY CHECKLIST: Pass	Fail – Describe Reason[2]
Item or System Tags (i.e. AC-1, RTU-1, HP-1)	*Minimart HVAC Systems*	☐	☐
Equipment Type[3]:	*Packaged DX*	☐	☐
Number of Systems	*2*	☐	☐
Max Allowed Heating Capacity[1]	*59,200 Btu/hr*	☐	☐
Minimum Heating Efficiency[1]	*80% AFUE*	☐	☐
Max Allowed Cooling Capacity[1]	*61,000 Btu/hr*	☐	☐
Cooling Efficiency[1]	*13.0 SEER / 11.0 EER*	☐	☐
Duct Location/ R-Value	*Conditioned / 4.2*	☐	☐
When duct testing is required, submit **MECH-4A** & **MECH-4-HERS**	*Yes*	☐	☐
Economizer	*No Economizer*	☐	☐
Thermostat	*Setback Required*	☐	☐
Fan Control	*Constant Volume*	☐	☐

1. If the Actual installed equipment performance efficiency and capacity is less than the Proposed (from the energy compliance submittal or from the building plans) the responsible party shall resubmit energy compliance to include the new changes.
2. For additional detailed discrepancy use Page 2 of the Inspection Checklist Form. Compliance fails if a Fail box is checked.
3. Indicate Equipment Type: Gas (Pkg or, Split), VAV, HP (Pkg or split), Hydronic, PTAC, or other.

CERTIFICATE OF COMPLIANCE and FIELD INSPECTION ENERGY CHECKLIST (Part 2 of 4) MECH-1C

Project Name	Date
Prince Truck Stop	*6/7/2011*

Discrepancies:

CERTIFICATE OF COMPLIANCE and FIELD INSPECTION ENERGY CHECKLIST (Part 3 of 4) MECH-1C

Project Name: *Prince Truck Stop*

Date: *6/7/2011*

Required Acceptance Tests

Designer:

This form is to be used by the designer and attached to the plans. Listed below are all the acceptance tests for mechanical systems. The designer is required to check the applicable boxes by all acceptance tests that apply and listed all equipment that requires an acceptance test. If all equipment of a certain type requires a test, list the equipment description and the number of systems. The NA number designates the Section in the Appendix of the Nonresidential Reference Appendices Manual that describes the test. Since this form will be part of the plans, completion of this section will allow the responsible party to budget for the scope of work appropriately.

Building Departments:

Systems Acceptance: Before occupancy permit is granted for a newly constructed building or space, or a new space-conditioning system serving a building or space is operated for normal use, all control devices serving the building or space shall be certified as meeting the Acceptance Requirements for Code Compliance.
Systems Acceptance: Before occupancy permit is granted. All newly installed HVAC equipment must be tested using the Acceptance Requirements.

The MECH-1C form is not considered a completed form and is not to be accepted by the building department unless the correct boxes are checked. The equipment requiring testing, person performing the test (Example: HVAC installer, TAB contractor, controls contractor, PE in charge of project) and what Acceptance test must be conducted. The following checked-off forms are required for **ALL** newly installed equipment. In addition a Certificate of Acceptance forms shall be submitted to the building department that certifies plans, specifications, installation, certificates, and operating and maintenance information meet the requirements of §10-103(b) and Title-24 Part 6. The building inspector must receive the properly filled out and signed forms before the building can receive final occupancy.

TEST DESCRIPTION		MECH-2A	MECH-3A	MECH-4A	MECH-5A	MECH-6A	MECH-7A	MECH-8A	MECH-9A	MECH-10A	MECH-11A
Equipment Requiring Testing or Verification	Qty.	Outdoor Ventilation For VAV & CAV	Constant Volume & Single-Zone Unitary	Air Distribution Ducts	Economizer Controls	Demand Control Ventilation DCV	Supply Fan VAV	Valve Leakage Test	Supply Water Temp. Reset	Hydronic System Variable Flow Control	Automatic Demand Shed Control
Carrier 48HJD006	*2*	☐	☑	☑	☐	☐	☐	☐	☐	☐	☑
		☐	☐	☐	☐	☐	☐	☐	☐	☐	☐
		☐	☐	☐	☐	☐	☐	☐	☐	☐	☐
		☐	☐	☐	☐	☐	☐	☐	☐	☐	☐
		☐	☐	☐	☐	☐	☐	☐	☐	☐	☐
		☐	☐	☐	☐	☐	☐	☐	☐	☐	☐
		☐	☐	☐	☐	☐	☐	☐	☐	☐	☐
		☐	☐	☐	☐	☐	☐	☐	☐	☐	☐
		☐	☐	☐	☐	☐	☐	☐	☐	☐	☐
		☐	☐	☐	☐	☐	☐	☐	☐	☐	☐
		☐	☐	☐	☐	☐	☐	☐	☐	☐	☐
		☐	☐	☐	☐	☐	☐	☐	☐	☐	☐
		☐	☐	☐	☐	☐	☐	☐	☐	☐	☐
		☐	☐	☐	☐	☐	☐	☐	☐	☐	☐

CERTIFICATE OF COMPLIANCE and FIELD INSPECTION ENERGY CHECKLIST (Part 4 of 4) MECH-1C

Project Name	Date
Prince Truck Stop	*6/7/2011*

TEST DESCRIPTION		MECH-12A	MECH-13A	MECH-14A	MECH-15A	
Equipment Requiring Testing	Qty.	Fault Detection & Diagnostics for DX Units	Automatic Fault Detection & Diagnostics for Air & Zone	Distributed Energy Storage DX AC Systems	Thermal Energy Storage (TES) Systems	Test Performed By:
Carrier 48HJD006	*2*	☐	☐	☐	☐	
		☐	☐	☐	☐	
		☐	☐	☐	☐	
		☐	☐	☐	☐	
		☐	☐	☐	☐	
		☐	☐	☐	☐	
		☐	☐	☐	☐	
		☐	☐	☐	☐	
		☐	☐	☐	☐	
		☐	☐	☐	☐	
		☐	☐	☐	☐	
		☐	☐	☐	☐	
		☐	☐	☐	☐	
		☐	☐	☐	☐	
		☐	☐	☐	☐	
		☐	☐	☐	☐	
		☐	☐	☐	☐	
		☐	☐	☐	☐	
		☐	☐	☐	☐	
		☐	☐	☐	☐	
		☐	☐	☐	☐	
		☐	☐	☐	☐	
		☐	☐	☐	☐	
		☐	☐	☐	☐	
		☐	☐	☐	☐	
		☐	☐	☐	☐	
		☐	☐	☐	☐	
		☐	☐	☐	☐	
		☐	☐	☐	☐	
		☐	☐	☐	☐	
		☐	☐	☐	☐	
		☐	☐	☐	☐	
		☐	☐	☐	☐	
		☐	☐	☐	☐	
		☐	☐	☐	☐	
		☐	☐	☐	☐	

AIR SYSTEM REQUIREMENTS (Part 1 of 2) MECH-2C

Project Name	Date
Prince Truck Stop	*6/7/2011*

Item or System Tags (i.e. AC-1, RTU-1, HP-1)		*Minimart HVAC Systems*		
Number of Systems		*2*		
	Indicate Page Reference on Plans or Schedule and indicate the applicable exception(s)			
MANDATORY MEASURES	**T-24 Sections**			
Heating Equipment Efficiency	112(a)	*80% AFUE*		
Cooling Equipment Efficiency	112(a)	*13.0 SEER / 11.0 EER*		
HVAC Heat Pump Thermostat	112(b), 112(c)	*n/a*		
Furnace Controls/Thermostat	112(c), 115(a)	*n/a*		
Natural Ventilation	121(b)	*Yes*		
Mechanical Ventilation	121(b)	*929 cfm*		
VAV Minimum Position Control	121(c)	*No*		
Demand Control Ventilation	121(c)	*No*		
Time Control	122(e)	*Programmable Switch*		
Setback and Setup Control	122(e)	*Setback Required*		
Outdoor Damper Control	122(f)	*Auto*		
Isolation Zones	122(g)	*n/a*		
Pipe Insulation	123			
Duct Location/ R-value	124	*Conditioned / 4.2*		
PRESCRIPTIVE MEASURES				
Calculated Design Heating Load	144(a & b)	*n/a*		
Proposed Heating Capacity	144(a & b)	*118,400 Btu/hr*		
Calculated Design Cooling Load	144(a & b)	*n/a*		
Proposed Cooling Capacity	144(a & b)	*105,882 Btu/hr*		
Fan Control	144(c)	*Constant Volume*		
DP Sensor Location	144(c)			
Supply Pressure Reset (DDC only)	144(c)	*Yes*		
Simultaneous Heat/Cool	144(d)	*No*		
Economizer	144(e)	*No Economizer*		
Heat Air Supply Reset	144(f)	*Constant Temp*		
Cool Air Supply Reset	144(f)	*Constant Temp*		
Electric Resistance Heating[1]	144(g)			
Air Cooled Chiller Limitation	144(i)			
Duct Leakage Sealing. If Yes, a MECH-4-A must be submitted	144(k)	*Yes*		

1. Total installed capacity (MBtu/hr) of all electric heat on this project exclusive of electric auxiliary heat for heat pumps. If electric heat is used explain which exception(s) to §144(g) apply.

WATER SIDE SYSTEM REQUIREMENTS (Part 2 of 2) MECH-2C

Project Name	Date
Prince Truck Stop	*6/7/2011*

	WATER[2] SIDE SYSTEMS: Chillers, Towers, Boilers, Hydronic Loops			
Item or System Tags (i.e. AC-1, RTU-1, HP-1)[1]				
Number of Systems				
	Indicate Page Reference on Plans or Specification[2]			
MANDATORY MEASURES	**T-24 Sections**			
Equipment Efficiency	112(a)			
Pipe Insulation	123			
PRESCRIPTIVE MEASURES				
Cooling Tower Fan Controls	144(a & b)			
Cooling Tower Flow Controls	144(h)			
Variable Flow System Design	144(h)			
Chiller and Boiler Isolation	144(j)			
CHW and HHW Reset Controls	144(j)			
WLHP Isolation Valves	144(j)			
VSD on CHW, CW & WLHP Pumps>5HP	144(j)			
DP Sensor Location	144(j)			

1. The proposed equipment need to match the building plans schedule or specifications. If a requirement is not applicable, put "N/A" in the column next to applicable section.
2. For each chiller, cooling tower, boiler, and hydronic loop (or groups of similar equipment) fill in the reference to sheet number and/or specification section and paragraph number where the required features are documented. If a requirement is not applicable, put "N/A" in the column next to applicable section.

	Service Hot Water, Pool Heating			
Item or System Tags (i.e. WH-1, WHP, DHW, etc…)[1]		*DHW Heater*		
Number of Systems		*1*		
	Indicate Page Reference on Plans or Schedule[2]			
MANDATORY MEASURES	**T-24 Sections**			
SERVICE HOT WATER				
Certified Water Heater	111, 113(a)	*Std Gas 50 gal 0.59 EF*		
Water Heater Efficiency	113(b)	*0.59 EF*		
Service Water Heating Installation	113(c)	*Controls Req.*		
Pipe Insulation	123	*n/a*		
POOL AND SPA				
Pool and Spa Efficiency and Control	114(a)	*n/a*		
Pool and Spa Installation	114(b)	*n/a*		
Pool Heater – No Pilot Light	115(c)	*n/a*		
Spa Heater – No Pilot Light	115(d)	*n/a*		
Pipe Insulation	123	*Required*		

1. The Proposed equipment needs to match the building plans schedule or specifications. If a requirement is not applicable, put "N/A" in the column next to applicable section.
2. For each water heater, pool heater and domestic water loop (or groups of similar equipment) fill in the reference to sheet number and/or specification section and paragraph number where the required features are documented. If a requirement is not applicable, put "N/A" in the column.

MECHANICAL VENTILATION AND REHEAT

MECH-3C

Project Name: *Prince Truck Stop*

Date: *6/7/2011*

	MECHANICAL VENTILATION (§121(b)2)								REHEAT LIMITATION (§144(d))				
	AREA BASIS			OCCUPANCY BASIS					VAV MINIMUM				
A	B	C	D	E	F	G	H	I	J	K	L	M	N
Zone/System	Condition Area (ft^2)	CFM per ft^2	Min CFM By Area B X C	Number Of People	CFM per Person	Min CFM by Occupant E X F	REQ'D V.A. Max of D or G	Design Ventilation Air CFM	50% of Design Zone Supply CFM	B X 0.4 CFM / ft^2	Max. of Columns H, J, K, 300 CFM	Design Minimum Air Setpoint	Transfer Air
Minimart	*3,717*	*0.25*	*929*	*62.0*	*15.0*	*929*	*929*	*929*					
Minimart HVAC Systems						*Total*	*929*	*929*					
Totals									Column I Total Design Ventilation Air				

C	Minimum ventilation rate per Section §121, Table 121-A.
E	Based on fixed seat or the greater of the expected number of occupants and 50% of the CBC occupant load for egress purposes for spaces without fixed seating.
H	Required Ventilation Air (REQ'D V.A.) is the larger of the ventilation rates calculated on an AREA BASIS or OCCUPANCY BASIS (Column D or G).
I	Must be greater than or equal to H, or use Transfer Air (column N) to make up the difference.
J	Design fan supply CFM (Fan CFM) x 50%; or the design zone outdoor airflow rate per §121.
K	Condition area (ft^2) x 0.4 CFM / ft^2; or
L	Maximum of Columns H, J, K, or 300 CFM
M	This must be less than or equal to Column L and greater than or equal to the sum of Columns H plus N.
N	Transfer Air must be provided where the Required Ventilation Air (Column H) is greater than the Design Minimum Air (Column M). Where required, transfer air must be greater than or equal to the difference between the Required Ventilation Air (Column H) and the Design Minimum Air (Column M), Column H minus M.

MECHANICAL EQUIPMENT DETAILS (Part 1 of 2) MECH-5C

Project Name: *Prince Truck Stop*

Date: *6/7/2011*

CHILLER AND TOWER SUMMARY

Equipment Name	Type	Qty.	Efficiency	Tons	PUMPS Qty.	PUMPS GPM	PUMPS BHP	PUMPS Pump Control

DHW / BOILER SUMMARY

System Name	Type	Distribution	Qty.	Rated Input	Vol. (Gals).	Energy Factor or RE	Standby Loss or Pilot	Tank Ext. R-Value	Status
Std Gas 50 gal 0.59 EF	*Small Gas*	*No Pipe Insulation*	*1*	*40,000*	*50*	*0.59*	*n/a*	*n/a*	*New*

MULTI-FAMILY CENTRAL WATER HEATING DETAILS

Hot Water Pump				Hot Water Piping Length (ft)			
Control	Qty.	HP	Type	In Plenum	Outside	Buried	Add ½" Insulation
							☐
							☐
							☐

CENTRAL SYSTEM RATINGS

System Name	Type	Qty.	HEATING Output	HEATING Aux. kW	HEATING Efficiency	COOLING Output	COOLING Efficiency	Status
Carrier 48HJD006	*Packaged DX*	*2*	*59,200*	*0.0*	*80% AFUE*	*61,000*	*13.0 SEER / 11.0 EER*	*New*

CENTRAL SYSTEM FAN SUMMARY

System Name	Fan Type	Economizer Type	SUPPLY FAN CFM	SUPPLY FAN BHP	RETURN FAN CFM	RETURN FAN BHP
Carrier 48HJD006	*Constant Volume*	*No Economizer*	*2,000*	*0.25*	*none*	

MECHANICAL EQUIPMENT DETAILS (Part 2 of 2) MECH-5C

Project Name: *Prince Truck Stop*

Date: *6/7/2011*

ZONE SYSTEM SUMMARY

		SYSTEM				VAV		Fan				
Zone Name	System Name	Type	Qty.	Heating	Cooling	Min CFM Ratio	Reheat Coil	CFM	BHP	Fan Cycles	ECM Motor	Outside Air
										☐	☐	
										☐	☐	
										☐	☐	
										☐	☐	
										☐	☐	
										☐	☐	
										☐	☐	
										☐	☐	
										☐	☐	
										☐	☐	
										☐	☐	
										☐	☐	
										☐	☐	
										☐	☐	
										☐	☐	
										☐	☐	
										☐	☐	
										☐	☐	
										☐	☐	
										☐	☐	

EXHAUST FAN SUMMARY

EXHAUST FAN				EXHAUST FAN				EXHAUST FAN			
Room Name	Qty.	CFM	BHP	Room Name	Qty.	CFM	BHP	Room Name	Qty.	CFM	BHP
Minimart	*2.0*	*100*	*0.10*								
Future Tenant Lease	*0.0*	*100*	*0.10*								

ENVELOPE MANDATORY MEASURES: NONRESIDENTIAL ENV-MM

Project Name	Date
Prince Truck Stop	*6/7/2011*

DESCRIPTION

Building Envelope Measures:

§118(a):	Installed insulating material shall have been certified by the manufacturer to comply with the California Quality Standards for insulating material, Title 20 Chapter 4, Article 3.
§118(c):	All Insulating Materials shall be installed in compliance with the flame spread rating and smoke density requirements of Sections 2602 and 707 of Title 24, Part 2.
§118(f):	The opaque portions of framed demising walls in nonresidential buildings shall have insulation with an installed R-value of no less than R-13 between framing members.
§117(a):	All Exterior Joints and openings in the building that are observable sources of air leakage shall be caulked, gasketed, weatherstripped or otherwise sealed.
§116(a) 1:	Manufactured fenestration products and exterior doors shall have air infiltration rates not exceeding 0.3 cfm/ft.^{2} of window area, 0.3 cfm/ft.^{2} of door area for residential doors, 0.3 cfm/ft.^{2} of door area for nonresidential single doors (swinging and sliding), and 1.0 cfm/ft.^{2} for nonresidential double doors (swinging).
§116(a) 2:	Fenestration U-factor shall be rated in accordance with NFRC 100, or the applicable default U-factor.
§116(a) 3:	Fenestration SHGC shall be rated in accordance with NFRC 200, or NFRC 100 for site-built fenestration, or the applicable default SHGC.
§116(b):	Site Constructed Doors, Windows and Skylights shall be caulked between the unit and the building, and shall be weatherstripped (except for unframed glass doors and fire doors).

LIGHTING MANDATORY MEASURES: NONRESIDENTIAL LTG-MM

Project Name	Date
Prince Truck Stop	*6/7/2011*

Indoor Lighting Measures:

§131(d):	**Shut-off Controls**
1.	For every floor, all interior lighting systems shall be equipped with a separate automatic control to shut off the lighting. This automatic control shall meet the requirements of Section 119 and may be an occupancy sensor, automatic time switch, or other device capable of automatically shutting off the lighting.
2.	Override for Building Lighting Shut-off: The automatic building shut-off system is provided with a manual, accessible override switch in sight of the lights. The area of override is not to exceed 5,000 square feet.
§119(h):	Automatic Control Devices Certified: All automatic control devices specified are certified, all alternate equipment shall be certified and installed as directed by the manufacturer.
§111:	Fluorescent Ballast and Luminaires Certified: All fluorescent fixtures specified for the project are certified and listed in the Directory. All installed fixtures shall be certified.
§131(a):	Individual Room/Area Controls: Each room and area in this building is equipped with a separate switch or occupancy sensor device for each area with floor-to-ceiling walls.
§131(b):	Uniform Reduction for Individual Rooms: All rooms and areas greater than 100 square feet and more than 0.8 watts per square foot of lighting load shall be controlled with bi-level switching for uniform reduction of lighting within the room.
§131(c):	Daylight Area Control: All rooms with windows and skylights that are greater than 250 square feet and that allow for the effective use of daylight in the area shall have 50% of the lamps in each daylit area controlled by a separate switch; or the effective use of daylight cannot be accomplished because the windows are continuously shaded by a building on the adjacent lot. Diagram of shading during different times of the year is included on plans.
§131(c):	Display Lighting. Display lighting shall be separately switched on circuits that are 20 amps or less.6.

Outdoor Lighting Measures:

§130(c)1:	Mandatory lighting power determination for medium base sockets without permanently installed ballasts
§132(a):	All permanently installed luminaires with lamps rated over 100 Watts either have a lamp efficacy of at least 60 lumens per Watt or are controlled by a motion sensor.
§132(b):	All Luminaires with lamps rated greater than 175 Watts in hardscape area, including parking lots, building entrances, canopies, and all outdoor sales areas meet the Cutoff Requirements.
§132(c)1:	All permanently installed outdoor lighting meets the control requirements listed.
§132(c):	Building facades, parking lots, garages, canopies, and outdoor sales areas meet the Multi-Level Lighting Requirements listed.

MECHANICAL MANDATORY MEASURES: NONRESIDENTIAL — MECH-MM

Project Name	Date
Prince Truck Stop	*6/7/2011*

Equipment and System Efficiencies

§111:	Any appliance for which there is a California standard established in the Appliance Efficiency Regulations will comply with the applicable standard.
§115(a):	Fan type central furnaces shall not have a pilot light.
§123:	Piping, except that conveying fluids at temperatures between 60 and 105 degrees Fahrenheit, or within HVAC equipment, shall be insulated in accordance with Standards Section 123.
§124:	Air handling duct systems shall be installed and insulated in compliance with Sections 601, 602, 603, 604, and 605 of the CMC Standards.

Controls

§122(e):	Each space conditioning system shall be installed with one of the following:
1A.	Each space conditioning system serving building types such as offices and manufacturing facilities (and all others not explicitly exempt from the requirements of Section 112 (d)) shall be installed with an automatic time switch with an accessible manual override that allows operation of the system during off-hours for up to 4 hours. The time switch shall be capable of programming different schedules for weekdays and weekends and have program backup capabilities that prevent the loss of the device's program and time setting for at least 10 hours if power is interrupted; or
1B.	An occupancy sensor to control the operating period of the system; or
1C.	A 4-hour timer that can be manually operated to control the operating period of the system.
2.	Each space conditioning system shall be installed with controls that temporarily restart and temporarily operate the system as required to maintain a setback heating and/or a setup cooling thermostat setpoint.
§122(g):	Each space conditioning system serving multiple zones with a combined conditioned floor area more than 25,000 square feet shall be provided with isolation zones. Each zone: shall not exceed 25,000 square feet; shall be provided with isolation devices, such as valves or dampers that allow the supply of heating or cooling to be setback or shut off independently of other isolation areas; and shall be controlled by a time control device as described above.
§122(c):	Thermostats shall have numeric setpoints in degrees Fahrenheit (F) and adjustable setpoint stops accessible only to authorized personnel.
§122(b):	Heat pumps shall be installed with controls to prevent electric resistance supplementary heater operation when the heating load can be met by the heat pump alone
§122(a&b):	Each space conditioning system shall be controlled by an individual thermostat that responds to temperature within the zone. Where used to control heating, the control shall be adjustable down to 55 degrees F or lower. For cooling, the control shall be adjustable up to 85 degrees F or higher. Where used for both heating and cooling, the control shall be capable of providing a deadband of at least 5 degrees F within which the supply of heating and cooling is shut off or reduced to a minimum.

Ventilation

§121(e):	Controls shall be provided to allow outside air dampers or devices to be operated at the ventilation rates as specified on these plans.
§122(f):	All gravity ventilating systems shall be provided with automatic or readily accessible manually operated dampers in all openings to the outside, except for combustion air openings.
§121(f):	Ventilation System Acceptance. Before an occupancy permit is granted for a newly constructed building or space, or a new ventilating system serving a building or space is operated for normal use, all ventilation systems serving the building or space shall be certified as meeting the Acceptance Requirements for Code Compliance

Service Water Heating Systems

§113(c)	Installation
3.	Temperature controls for public lavatories. The controls shall limit the outlet Temperature to 110° F.
2.	Circulating service water-heating systems shall have a control capable of automatically turning off the circulating pump when hot water is not required.

HVAC SYSTEM HEATING AND COOLING LOADS SUMMARY

Project Name	Date
Prince Truck Stop	6/7/2011
System Name	**Floor Area**
Minimart HVAC Systems	3,717

ENGINEERING CHECKS

Number of Systems	2
Heating System	
Output per System	59,200
Total Output (Btuh)	118,400
Output (Btuh/sqft)	31.9
Cooling System	
Output per System	61,000
Total Output (Btuh)	122,000
Total Output (Tons)	10.2
Total Output (Btuh/sqft)	32.8
Total Output (sqft/Ton)	365.6
Air System	
CFM per System	2,000
Airflow (cfm)	4,000
Airflow (cfm/sqft)	1.08
Airflow (cfm/Ton)	393.4
Outside Air (%)	23.2 %
Outside Air (cfm/sqft)	0.25
Note: values above given at ARI conditions	

SYSTEM LOAD

	COIL COOLING PEAK			COIL HTG. PEAK	
	CFM	Sensible	Latent	CFM	Sensible
Total Room Loads	3,972	75,636	19,879	2,949	54,654
Return Vented Lighting		0			
Return Air Ducts		2,269			1,640
Return Fan		0			0
Ventilation	929	23,142	-4,494	929	43,012
Supply Fan		2,030			-2,030
Supply Air Ducts		2,269			1,640
TOTAL SYSTEM LOAD		105,345	15,384		98,916

HVAC EQUIPMENT SELECTION

Carrier 48HJD006	105,882	13,537		118,400
Total Adjusted System Output (Adjusted for Peak Design conditions)	105,882	13,537		118,400
TIME OF SYSTEM PEAK		Aug 3 PM		Jan 1 AM

HEATING SYSTEM PSYCHROMETRICS (Airstream Temperatures at Time of Heating Peak)

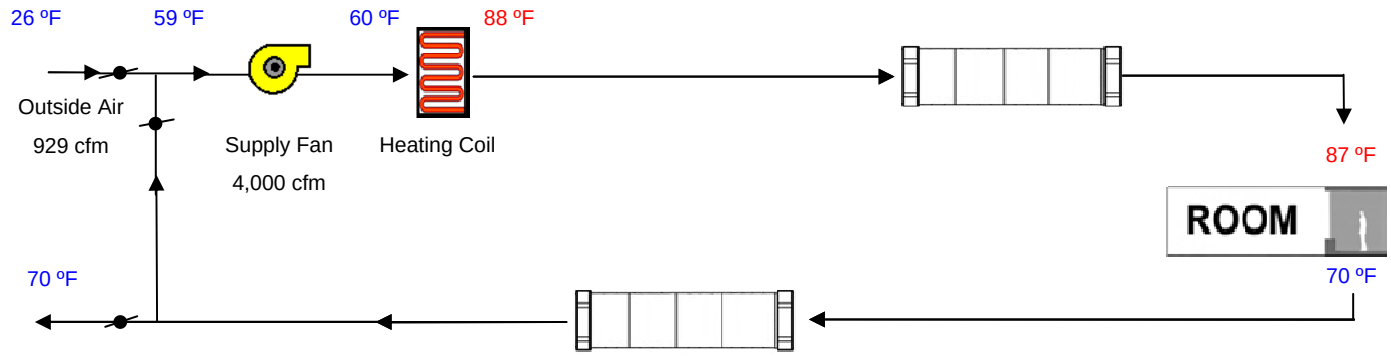

COOLING SYSTEM PSYCHROMETICS (Airstream Temperatures at Time of Cooling Peak)

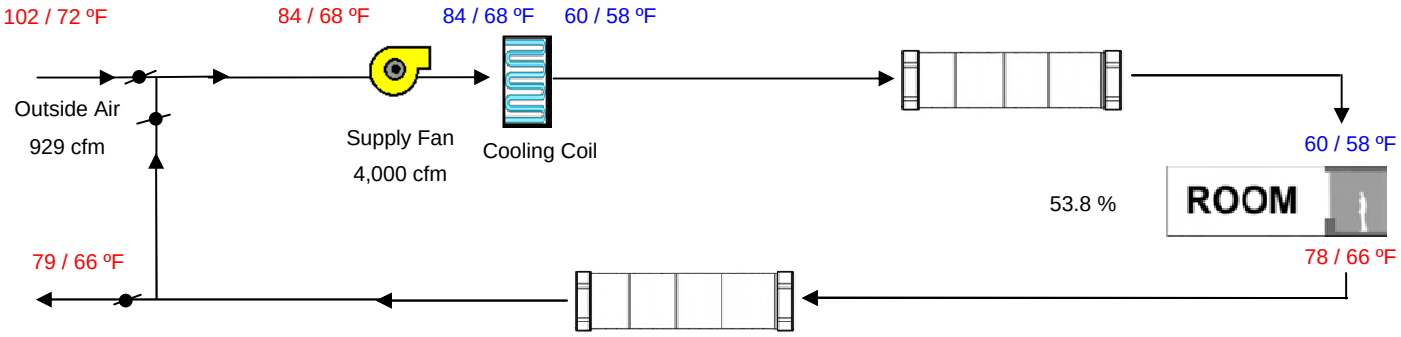

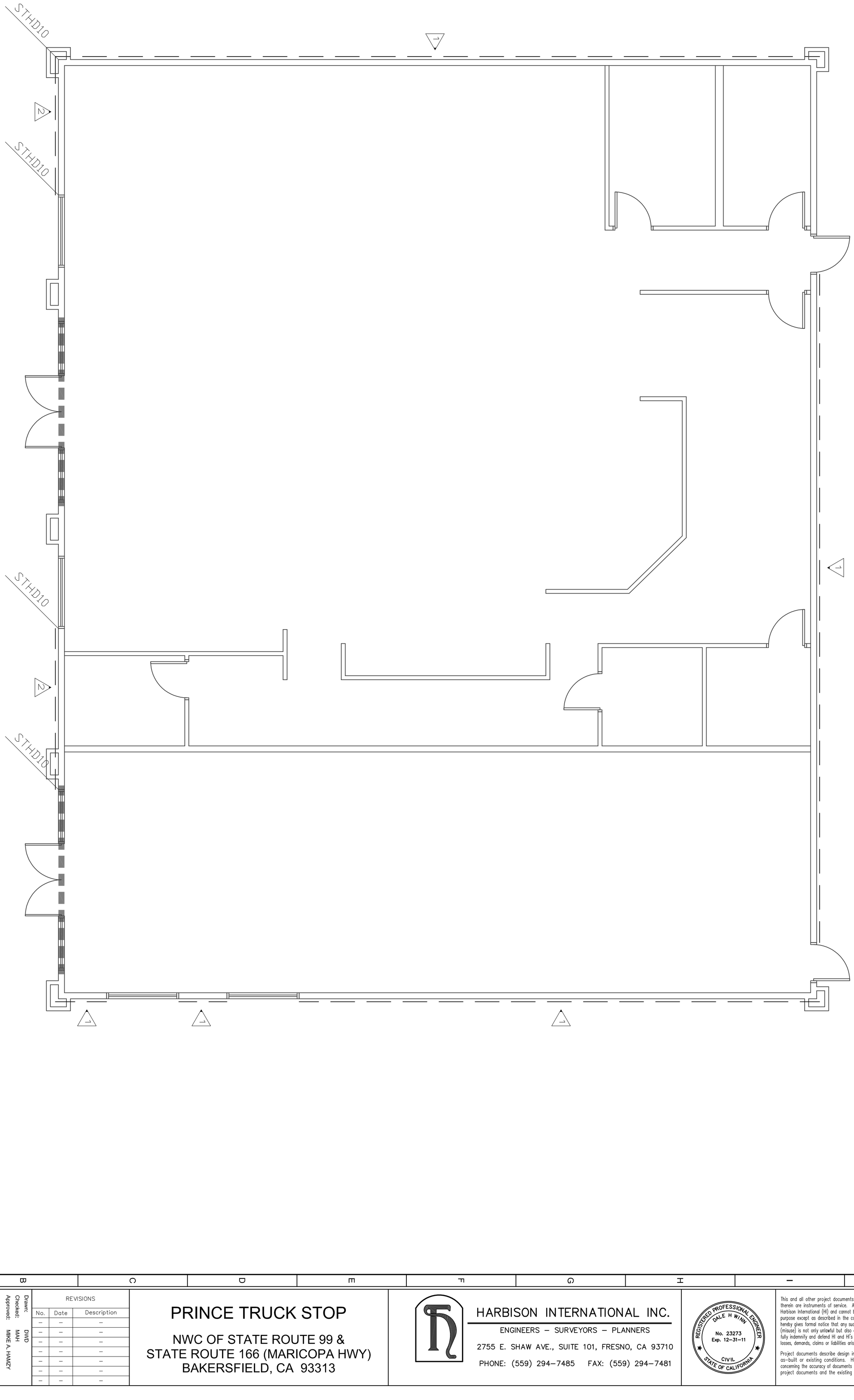

ANCHOR BOLT EMB. & SIDE COVER (OR HAIRPIN)

A.B. HOLDOWN	SQUARE STEEL PLATE SIZE	CONCRETE COVER ALL SIDES (OR 3" HAIRPIN)	MIN. EMBEDMENT DEPTH
1/2"ø	= 3" × 1/4"	5"	7"
5/8"ø	= 3" × 1/4"	7"	10"
3/4"ø	= 3" × 5/16"	8"	10"
7/8"ø	= 3-1/2" × 5/8"	9"	12"
1"ø	= 3-3/4" × 7/16"	10"	12"
1-1/8"ø	= 4" × 7/16"	11"	15"
1-1/2"ø	= 4-1/4" × 1/2"	12"	18"

SHEARWALL SCHEDULE (SPECIFIC)

PANEL TYPE		
1	3/8" CDX PLWD. OR O.S.B., EDGES: 8d @ 6" O.C., FIELD: 8d @ 12" O.C.....	1/2"ø x 13" @ 32" O.C.
2	3/8" CDX PLWD. OR O.S.B., EDGES: 8d @ 4" O.C., FIELD: 8d @ 12" O.C.....	1/2"ø x 13" @ 24" O.C.

ALL WALL STUDS SHALL BE 16" OC U.N.O.

SHEAR WALL PLAN

SCALE: 1/4" = 1'-0"

N

Sheet No.	Title	Drawn:	Checked:	Approved:	Project No:	Date:
S1.0	SHEAR WALL PLAN	DWD	MAH	MIKE A. HAMZY	09-208	06/16/2011

REVISIONS		
No.	Date	Description
–	–	–
–	–	–
–	–	–
–	–	–
–	–	–
–	–	–
–	–	–

PRINCE TRUCK STOP

NWC OF STATE ROUTE 99 &
STATE ROUTE 166 (MARICOPA HWY)
BAKERSFIELD, CA 93313

HARBISON INTERNATIONAL INC.
ENGINEERS – SURVEYORS – PLANNERS
2755 E. SHAW AVE., SUITE 101, FRESNO, CA 93710
PHONE: (559) 294–7485 FAX: (559) 294–7481

REGISTERED PROFESSIONAL ENGINEER
DALE H WINN
No. 23273
Exp. 12-31-11
CIVIL
STATE OF CALIFORNIA

This and all other project documents and all ideas, aesthetics and designs incorporated therein are instruments of service. All project documents are the registered property of Harbison International (HI) and cannot be lawfully used in whole or in part for any project or purpose except as described in the contractual agreement between HI and the Client. HI hereby gives formal notice that any such project document use, reproduction, or modification (misuse) is not only unlawful but also automatically binds all parties involved with misuse to fully indemnify and defend HI and HI's consultants to the maximum legal extent against all losses, demands, claims or liabilities arising directly or indirectly from project document misuse.

Project documents describe design intent of work and are not a representation of the as-built or existing conditions. HI and HI's consultants make no representations concerning the accuracy of documents and are not responsible for any discrepancies between project documents and the existing conditions.

SPECIFICATIONS

DIVISION 1 – GENERAL REQUIREMENTS

1. THE WORK INCLUDES NEW TENANT IMPROVEMENTS IN AN EXISTING SPACE, PER SQUARE FOOT CALCULATIONS AS NOTED ON THE TITLE SHEET. THE CONTRACT SHALL INCLUDE THE CONSTRUCTION OF THIS FACILITY, IN ITS ENTIRETY AS OUTLINED IN THIS SET OF CONSTRUCTION DOCUMENTS AND TO SECURE AND PAY FOR ANY GOVERNMENT FEES, LICENSES AND PERMITS.

2. THE GENERAL CONTRACTOR SHALL OBTAIN A CURRENT COPY OF THE LANDLORD'S TENANT CRITERIA BOOKLET AND ANY ADDENDUM THERETO. CONTRACTOR MUST FAMILIARIZE THEMSELVES WITH ITS REQUIREMENTS AND RESTRICTIONS AND PERFORM ALL WORK ACCORDING TO ALL GUIDELINES SET FOURTH.

3. ~~CON~~TRACTORS SHALL VISIT THE PREMISES WHILE BIDDING AND SHALL FAMILIARIZE THEMSELVES WITH EXISTING CONDITIONS AND THE REQUIREMENTS OF THE PROJECT PRIOR TO DEVELOPING THEIR BID. MATERIAL QUANTITIES SHALL BE BASED ON ACTUAL FIELD CONDITIONS AND MEASUREMENTS. DO NOT RELY ON SCALING PLANS FOR ACCURATE DIMENSIONING.

4. PRIOR TO BEGINNING THE WORK, VERIFY ALL EXISTING DIMENSIONS AND SQUARE FOOTAGES. NOTIFY THE OWNER OF COMPLIANCE OR DISCREPANCIES, COMPARING THOSE DISCREPANCIES TO THE NUMBERS ON THE TITLE SHEET.

5. CONTRACTORS SHALL TAKE CARE TO PROTECT ADJACENT AREAS FROM DUST AND DAMAGE DURING THE CONSTRUCTION PROCESS, AND SHALL CLEAN UP AFTER THEMSELVES AT THE END OF EACH WORKING DAY.

6. ALL RUBBISH AND TRASH SHALL BE REMOVED FROM THE PREMISES AND PROPERLY DISPOSED OF EACH DAY. NO RUBBISH SHALL BE LEFT IN THE PREMISES AFTER WORK IS COMPLETED EACH DAY. COORDINATE RUBBISH REMOVAL WITH THE MALL'S TENANT COORDINATOR.

7. ALL DRAWINGS HEREIN CREATE AN ENTIRE PACKAGE. ALL TRADES SHALL BE RESPONSIBLE FOR REVIEWING THEIR RESPECTIVE REQUIREMENTS AND COORDINATING THEIR HIDDEN OR EXPOSED WORK WITH OTHER RELATED TRADES.

8. COORDINATE ALL WORK OF THE VARIOUS TRADES AND SUBCONTRACTORS TO ASSURE EFFICIENT AND ORDERLY INSTALLATION. PROVIDE ACCOMMODATION FOR ITEMS INSTALLED AT A LATER DATE. VERIFY THAT CHARACTERISTICS OF ELEMENTS OF INTERRELATED OPERATING EQUIPMENT ARE COMPATIBLE; COORDINATE WORK OF VARIOUS SECTIONS WHICH HAVE INTERDEPENDANT RESPONSIBILITIES FOR INSTALLING, CONNECTING TO, AND PLACING IN SERVICE, SUCH EQUIPMENT. COORDINATE SPACE REQUIREMENTS AND INSTALLATION OF MECHANICAL AND ELECTRICAL WORK AND FIRE SPRINKLER SYSTEM WHICH ARE INDICATED, DETAILED, OR IMPLIED DIAGRAMMATICALLY ON DRAWINGS.

9. UNLESS SPECIFICALLY NOTED, PROVIDE AND PAY FOR LABOR, MATERIALS AND EQUIPMENT, TOOLS, CONSTRUCTION EQUIPMENT AND MACHINERY, AND OTHER FACILITIES AND SERVICES NECESSARY FOR PROPER EXECUTION AND COMPLETION OF WORK, INCLUDING PERMITS.

10. GENERAL CONTRACTOR SHALL PURCHASE AND MAINTAIN INSURANCE COVERAGE IN ACCORDANCE WITH THE REQUIREMENTS OF THE LANDLORD AND THE TENANT. VERIFY AND COORDINATE WITH THE TENANT'S PROJECT MANAGER, ANY ADDITIONAL REQUIREMENTS.

11. FURNISH ALL REQUIRED TEMPORARY FACILITIES AND ALL TEMPORARY UTILITIES IMMEDIATELY AFTER RECEIPT OF NOTICE TO PROCEED FOR USE IN CONVENIENCE OF ALL THOSE ENGAGED IN THE PROJECT WORK.

12. ALL CONTRACTORS MUST STAY BEHIND THE BARRIERS AND MAINTAIN ACCESS TO SUCH AREAS CLEAN AND FREE OF CONSTRUCTION MATERIALS AND DEBRIS. FAILURE TO MAINTAIN CLEAN PREMISES WILL RESULT IN BUILDING MANAGEMENT HAVING SUCH MATERIALS AND DEBRIS REMOVED AND ALL CHARGES FOR MAINTENANCE WILL BE BILLED TO GENERAL CONTRACTOR.

13. COORDINATE ALL CONSTRUCTION & SCHEDULING WITH THE TENANT COORDINATOR REVIEWING ALL SCHEDULED ACTIVITIES AT OUTSET OF CONSTRUCTION.

14. ALLOWABLE TOLERANCES – UNLESS OTHERWISE NOTED OR INDICATED, THE FOLLOWING TOLERANCES SHALL APPLY TO ALL WORK:
a. ALL VERTICAL SURFACES SHALL BE PLUMB OR CONSTRUCTED TO THE EXACT SLOPES OR ANGLES INDICATED.
b. THE MAXIMUM DEVIATION FROM THE TRUE PLANE FOR VERTICAL AND HORIZONTAL SURFACES SHALL NOT BE GREATER THAN 1/8" IN 10'-0" AS MEASURED BY A STRAIGHT EDGE PLACED ANYWHERE ON THE SURFACE.
c. ALL HORIZONTAL SURFACES SHALL BE LEVEL OR CONSTRUCTED TO THE EXACT ANGLE INDICATED OR INTENDED.
d. WALL AND SOFFIT INTERSECTIONS SHALL BE 90 OR THE EXACT ANGLE INDICATED OR INTENDED.
e. ALL CORNERS AND EDGES SHALL BE STRAIGHT AND TRUE WITHOUT DENTS, WAVES OR BULGES OR OTHER BLEMISHES.
f. ALL JOINTS SHALL BE TIGHT, STRAIGHT, EVEN AND SMOOTH.
g. ALL OPERABLE ITEMS SHALL OPERATE SMOOTHLY WITHOUT STICKING OR BINDING AND WITHOUT EXCESSIVE "PLAY" OR LOOSENESS.

15. THE OWNER OR THE OWNER'S SUBCONTRACTORS AND THE LANDLORD MAY OCCUPY PORTIONS OF THE PROJECT DURING CONSTRUCTION. COORDINATE AND COOPERATE WITH THE OWNER TO MINIMIZE CONFLICT AND FACILITATE THE OWNER'S OPERATION.

16. ALL DIMENSIONS AND FINISHES SHALL BE VERIFIED AND COORDINATED WITH EXISTING CONDITIONS PRIOR TO CONSTRUCTION, FABRICATION, OR PURCHASING. IN CASE OF CONFLICT BETWEEN THE PROJECT REQUIREMENTS AND/OR EXISTING CONDITIONS, THE ONE HAVING THE MOST STRINGENT REQUIREMENTS SHALL GOVERN, AS APPROVED BY THE OWNER.

17. PERFORM ALL WORK IN ACCORDANCE WITH ACCEPTABLE TRADE PRACTICE TO INSURE THE HIGHEST QUALITY FINISHED PRODUCT – EXPRESSED OR IMPLIED. PERFORM ALL WORK BY SKILLED MECHANICS IN ACCORDANCE WITH ESTABLISHED STANDARDS OF WORKMANSHIP IN EACH OF THE VARIOUS TRADES.

18. COORDINATE BLOCKING REQUIREMENTS FOR SECURE ATTACHMENT OF ANY WALL OR CEILING MOUNTED ITEMS. WITH ADJACENT OF RELATED TRACES, ACCESSORIES EQUIPMENT AND FIXTURES INSTALL REQUIRED BLOCKING AT NO ADDITIONAL COST TO THE CONTRACT.

19. REPAIR PROPERTY DAMAGE BY THE INSTALLERS TO A LIKE NEW CONDITION OR REPLACE DAMAGED SURFACES AND MATERIALS OF THE PREVIOUSLY INSTALLED WORK BY OTHER TRADES, INSTALLERS AND SUBCONTRACTORS.

20. WHERE REQUESTED BY THE OWNER TO CERTIFY CONFORMANCE TO TRADE STANDARDS OR THE PROJECT REQUIREMENTS, THE CONTRACTOR SHALL ENLIST A TESTING LABORATORY AT THE OWNER'S COST. IF THE REQUESTED TEST SHOWS NON-CONFORMANCE TO GENERALLY ACCEPTED TRADE STANDARDS OR THE PROJECT REQUIREMENTS, THE CONTRACTOR SHALL CORRECT THE DEFICIENCY AT NO ADDITIONAL COSTS TO THE OWNER AND REIMBURSE ALL THE COSTS OF THE TESTING TO THE OWNER, UNLESS THE CONTRACTOR HAS USED PRODUCTS INCORRECTLY LABELED BY THE MANUFACTURER OR HAS MADE PREVIOUSLY APPROVED CHANGES.

21. PROVIDE SECURITY OF THE WORK, INCLUDING TOOLS AND UNINSTALLED MATERIALS. PROTECT THE WORK, STORED PRODUCTS, CONSTRUCTION EQUIPMENT AND OWNER'S PROPERTY FROM THEFT AND VANDALISM AND THE PREMISES FROM ENTRY BY UNAUTHORIZED PERSONNEL UNTIL FINAL ACCEPTANCE BY OWNER.

22. MAINTAIN AN ACTIVE FIRE EXTINGUISHER AT THE PROJECT THROUGHOUT ALL PHASES OF CONSTRUCTION.

23. DO NOT USE MATERIAL OR EQUIPMENT FOR ANY PURPOSE OTHER THAN THAT FOR WHICH IT IS SPECIFICALLY DESIGNED OR SPECIFIED. ALL MATERIALS AND EQUIPMENT THAT ARE SIMILAR SHALL BE THE SAME TYPE, MODEL, AND STYLE FOR THE SAME USE THROUGHOUT THE PROJECT OR THEY SHALL BE REJECTED.

24. WHEN THE PROJECT REQUIREMENTS REQUIRE THAT THE INSTALLATION OF WORK SHALL COMPLY WITH MANUFACTURER'S INSTRUCTIONS, PERFORM THE WORK IN STRICT ACCORDANCE WITH THE MOST CURRENT WRITTEN MANUFACTURER'S INSTRUCTIONS.

25. ALL PRODUCTS AND EQUIPMENT SHALL BE DELIVERED IN UNDAMAGED CONDITION AND STORED IN ACCORDANCE WITH MANUFACTURER'S INSTRUCTIONS TO AVOID DISRUPTION OF THE WORK OR DAMAGE TO THE ITEMS. REPLACE DAMAGED OR UNFIT MATERIALS, AT NO COST TO THE OWNER.

26. NOTIFY THE OWNER WHEN THE WORK IS SUBSTANTIALLY COMPLETE AND READY FOR INSPECTION. UPON INSPECTION, PROVIDE WRITTEN OPERATION AND MAINTENANCE INSTRUCTIONS AND GUARANTEES FOR ALL EQUIPMENT AND MATERIALS INSTALLED. PROVIDE WRITTEN GUARANTEES FOR A PERIOD OF ONE (1) YEAR FROM THE DATE OF FINAL ACCEPTANCE OF THE WORK.

27. PROVIDE FINAL CLEANUP AND DAMAGE REPAIR AT THE PROJECT CONCLUSION. LEAVE THE PREMISES NEAT, CLEAN AND CLEAR OF TOOLS, EQUIPMENT AND SURPLUS MATERIALS, UNLESS REQUESTED BY THE OWNER. CLEANUP SHALL INCLUDE AND NOT BE LIMITED TO:
a. HAND MOPING AND WASHING OF ALL FLOORS, WALLS, AND CEILINGS AS REQUIRED.
b. HAND DUSTING AND CLEANING OF ALL SHELVING, CABINETRY, CASEWORK, GLASS AND MIRRORS BOTH INSTALLED UNDER THIS CONTRACT OR EXISTING WALLS, CEILINGS, FIXTURES, ETC.
c. REPAIR OR REPLACEMENT OF PROPERTY DAMAGED DURING FINAL COMPLETION OF THE PROJECT.
2-SEPERATE CLEAN UPS WILL BE REQUIRED FOR THIS JOB, (1) AT SOFT OPENING, AND ONE PRIOR TO GRAND OPENING.

28. CONTRACTOR AND CARPENTERS TO PROVIDE 8 HOURS TO INSTALL AND HANG ANY MISCELLANEOUS AND SMALL WEAR ITEMS AND CLEAN ALL ITEMS BEFORE PUNCH LIST AND BEFORE GRAND OPENING.

DIVISION 2 – DEMOLITION/BUILDING ALTERATIONS – NOT USED

DIVISION 3 – CONCRETE REPAIR & REPLACEMENT

1. CONCRETE SLABS ON GRADE SHALL HAVE A MINIMUM 28-DAY STRENGTH OF 3,000 PSI ALL CONCRETE CONSTRUCTION SHALL CONFORM TO A.C.I. MECHANICALLY VIBRATE ALL

2. CONCRETE WHEN PLACED, EXCEPT THAT SLABS ON GRADE NEED BE VIBRATED ONLY AT TRENCHES, FLOOR DUCTS, TURNDOWNS, ETC. MAXIMUM SLUMP 4 1/2" FOR CONCRETE WITHOUT PLASTICIZER. IF PLASTICIZER IS USED, A HIGHER FINAL SLUMP MAY BE ALLOWED UPON STRUCTURAL ENGINEER'S APPROVAL. CAST CLOSURE POUR AROUND COLUMNS AFTER COLUMN DEAD LOAD IS APPLIED. UNLESS APPROVED OTHERWISE IN WRITING BY THE ARCHITECT, ALL CONCRETE SLABS ON GRADE SHALL BE BOUND BY CONTROL JOINTS (KEYED OR SAW CUT), AS SHOWN ON THE FOUNDATION PLAN, SUCH THAT THE ENCLOSED AREA DOES NOT EXCEED 150 SQUARE FEET. KEYED CONTROL JOINTS NEED ONLY OCCUR AT EXPOSED EDGES DURING POURING, ALL OTHER JOINTS MAY BE SAW CUT.

DIVISION 4 – MASONRY: NOT USED

DIVISION 5 – METAL FABRICATIONS

1. PROVIDE ALL MISCELLANEOUS METAL ITEMS INCLUDING MATERIALS, FABRICATIONS, FASTENINGS, AND ACCESSORIES REQUIRED FOR FINISHED INSTALLATION AS INDICATED AND SPECIFIED.

2. STEEL SHALL BE ASTM A366 AMERICAN OPEN HEARTH SHEET STEEL, FREE FROM SCALE AND PITTING AND OTHER DEFECTS AFFECTING APPEARANCE.

3. TUBING SHALL CONFORM TO REQUIREMENTS OF ASTM A500 OR A501 AS APPROVED.

4. WHERE METAL ITEMS ARE TO BE ERECTED AND IN CONTACT WITH DISSIMILAR MATERIALS, PROVIDE CONTACT SURFACES WITH COATING OF AN IMPROVED ZINC CHROMATE PRIMER IN MANNER TO OBTAIN NOT LESS THAN 1.0 MIL DRY FILM THICKNESS.

5. SHEET STEEL SHALL CONFORM TO REQUIREMENTS OF ASTM A606.

6. CARBON STEEL BARS SHALL CONFORM TO REQUIREMENTS OF ASTM A321.

7. ALUMINUM EXTRUSIONS SHALL CONFORM TO ASTM B221. REVEALS TO BE BLACK ANODIZED FINISH.

8. FASTENERS SHALL BE AS REQUIRED FOR ASSEMBLY AND INSTALLATION OF FABRICATED ITEMS.

9. BOLTS SHALL BE LOW CARBON STEEL EXTERNALLY AND INTERNALLY THREADED FASTENERS CONFORMING WITH REQUIREMENTS OF ASTM A307; INCLUDE NECESSARY NUTS AND PLAIN HARDENED WASHERS. FOR MEMBERS FOR SUPPORT OF STRUCTURAL MEMBERS OR CONNECTION THERETO, USE FASTENERS CONFORMING WITH ASTM A325. FOR STAINLESS STEEL AND NONFERROUS ITEMS, USE TYPE 302 AND 304 STAINLESS STEEL FASTENERS.

10. MISCELLANEOUS MATERIALS: PROVIDE ALL INCIDENTAL ACCESSORY MATERIALS, TOOLS, METHODS, AND EQUIPMENT REQUIRED FOR FABRICATION AND INSTALLATION OF MISCELLANEOUS METAL ITEMS AS INDICATED ON DRAWINGS.

11. VERIFY DIMENSIONS PRIOR TO FABRICATION OR CASTING. FORM METAL ITEMS TO ACCURATE SIZES AND CONFIGURATIONS AS INDICATED ON DRAWINGS AND OTHERWISE REQUIRED FOR PROPER INSTALLATION; FABRICATE WITH ALL LINES STRAIGHT AND ANGLES SHARP, CLEAN AND TRUE; DRILL, COUNTERSINK, TAP, AND OTHERWISE PREPARE ITEMS FOR CONNECTION WITH WORK OF OTHER TRADES. MAKE PERMANENT CONNECTIONS BY WELDING AND GRIND ALL EXPOSED WELDS SMOOTH TO MATCH ADJACENT SURFACES; ROUGH JOINT SURFACES NOT PERMITTED. AVOID USING BOLTS AND SCREWS UNLESS SPECIFICALLY INDICATED OR APPROVED; WHEN USED, DRAW UP TIGHT AND TIE THREADS TO PREVENT LOOSENING.

12. ALL FERROUS METAL ITEMS SHALL BE SHOP FINISHED. TOUCHUP OR REPAIR DAMAGED AREAS PRIOR TO INSTALLATION WITH SAME MATERIAL.

13. PROVIDE CONTACT SURFACES WITH CONCRETE MASONRY OR OTHER DISSIMILAR MATERIALS WITH A MINIMUM ONE POINT ZERO (1.0) MIL DRY THICKNESS OF AN APPROVED ZINC CHROMATE PRIMER.

14. PROVIDE ALL STEEL BLOCKING AND BRACING IN METAL STUD FRAMED PARTITIONS NECESSARY FOR A COMPLETE INSTALLATION. INCLUDE AS REQUIRED FOR SUPPORT OF ALL WALL-MOUNTED EQUIPMENT AND FABRICATIONS AS INDICATED ON DRAWINGS. PROVIDE SUPPORTS AT JAMBS OF DOORS AND ELSEWHERE, AS REQUIRED.

15. FABRICATE ALL MISCELLANEOUS FRAMING AND BRACING ITEMS TO DETAIL OF STRUCTURAL SHAPES, PLATES, AND BARS; WELD JOINTS WHERE PRACTICAL; PROVIDE BOLTS AND OTHER CONNECTION DEVICES REQUIRED. INCLUDE ANCHORAGE, CLIP ANGLES, SLEEVES, ANCHOR PLATE, AND SIMILAR DEVICES, WHETHER IMPLIED OR INDICATED. SET ACCURATELY IN POSITION AS REQUIRED AND ANCHOR SECURELY TO BUILDING CONSTRUCTION WITH FASTENERS APPROPRIATE TO THE INSTALLATION.

DIVISION 6 – WOOD & PLASTICS

1. PROVIDE ROUGH LUMBER AND PLYWOOD IN STANDARD DIMENSIONS. MOISTURE CONTENT NOT MORE THAN 19%.

2. PROVIDE ALL NECESSARY ROUGH HARDWARE IN SIZES IN QUANTITIES REQUIRED BY LOCAL CODE OR APPROVED BY ARCHITECT.

3. USE FINISH OR CASING NAILS FOR EXPOSED WORK; USE TYPE "S" TRIM HEAD SCREWS FOR ATTACHMENT OR WOOD TRIM TO METAL STUDS, RUNNERS, OR FURRING.

4. RELIEVE BACKS OF WOOD TRIM; KERF BACKS OF MEMBERS MORE THAN 5" WIDE AND 1" NOMINAL THICKNESS; EASE ALL EXTERNAL CORNERS.

5 INSTALL LAMINATES ONLY WHEN RECEIVING SURFACES ARE IN A SATISFACTORY CONDITION FOR INSTALLATION.

6. USE ADHESIVES RECOMMENDED BY THE MANUFACTURER FOR THE PARTICULAR APPLICATION; INSTALL IN ACCORDANCE WITH MANUFACTURER'S MOST CURRENT PRINTED APPLICATION INSTRUCTIONS.

7. PROTECT FROM DAMAGE BY OTHER TRADES WORKING ADJACENT TO THE INSTALLATION. REPLACE DAMAGED SURFACES.

8. REMOVE EXCESS ADHESIVE AND CLEAN SURFACES USING MANUFACTURER'S RECOMMENDED SOLVENT AND CLEANING PROCEDURES.

9. FILL IN ALL SEAMS WITH MANUFACTURER'S APPROPRIATE COLOR SEAM COMPOUND.

10. INSTALL WOODS AND PLASTICS IN CONFORMANCE WITH DETAILS, WITH THE FOLLOWING CONSIDERATIONS AND REQUIREMENTS:
a. INSTALL ALL MATERIAL WITH TIGHT JOINTS.
b. MITER CASINGS AND MOLDINGS.
c. ALL RUNNING TRIM ONE (1) PIECE UP TO 10'-0". MATCH GRAIN AND COLOR PIECETO PIECE.
d. USE FINISH NAILS EXCEPT WHERE SCREWS ARE SPECIFICALLY CALLED FOR OR WHERE SCREWS DO NOT SHOW.
e. SET FASTENERS FOR PUTTYING.
f. WHERE SCREW ATTACHMENT IS REQUIRED, SPACE SCREWS AT EQUAL INTERVALS; SINK AND PUTTY IN FINISHED WOOD SURFACES.
g. ALL MEMBERS AND LINES SHALL BE LEVEL AND PLUMB.
h. SELECT AND CUT MATERIAL TO EXCLUDE DAMAGED, MARKED, OR DEFECTIVE AREAS.
i. FINISH EXPOSED SURFACES SMOOTH, FREE FROM TOOL AND MACHINE MARKS.
j. EASE ALL EXPOSED WOOD EDGES 1/8" MINIMUM RADIUS.
k. INSTALL FIRE RATED DOORS IN ACCORDANCE WITH REQUIREMENTS OF NATIONAL FIRE PROTECTION ASSOCIATION (NFPA) RECOMMENDATIONS.

11. ENSURE THAT ANY AND ALL WOOD AND PLASTICS USED COMPLY WITH ALL MUNICIPALITIES REQUIREMENTS FOR FLAMMABILITY AND SMOKE DEVELOPED RATINGS.

12. REVIEW THE TENANT CRITERIA IN REGARDS TO USING WOODS AND PLASTICS AND INSTALL NO SUCH MATERIALS WHEN DEEMED UNACCEPTABLE BY THE LANDLORD. IF THESE PLAN AND SPECIFICATIONS CALL FOR ANY SUCH MATERIALS TO BE INSTALLED IN A SITUATION NOT APPROVED BY THE LANDLORD, CONTACT THE ARCHITECT IMMEDIATELY.

DIVISION 7 – SEALANT AND CAULKING

1. PROVIDE NON-SAG SEALANT COMPLYING WITH REQUIREMENTS OF FEDERAL SPECIFICATIONS TTS-1543 OR FS TT-S-230 TYPE "II", CLASS "A". PROVIDE ACOUSTICAL SEALANT WHICH SHALL BE NON-HARDENING, NONDRYING SYNTHETIC RUBBER SEALING COMPOUND WITH MINIMUM 90% SOLIDS. USE AT ALL INTERIOR JOINTS AT INNER SECTIONS BETWEEN PLANES. AROUND DOOR AND WINDOW FRAMES PRIMER SHALL BE MADE OR RECOMMENDED BY SEALANT MANUFACTURER FOR THE SPECIFIC CONDITIONS AND SUBSTRATES.

2. PROVIDE BACKING MATERIAL BY DOW "ETHAFOAM" OR APPROVED EQUAL. APPLY SEALANT OVER BACKING TO UNIFORM THICKNESS IN CONTINUOUS BEADS FILLING ALL JOINTS AND VOIDS SOLID. SUPERFICIAL POINTING WITH THE SKIM BEAD WILL NOT BE ACCEPTED.

3. ALL SURFACES SHALL BE ADEQUATELY CLEANED AND PREPARED IN ACCORDANCE WITH MANUFACTURER'S WRITTEN INSTRUCTIONS PRIOR TO INSTALLATION.

4. KITCHEN EQUIPMENT CONTRACTOR SHALL PROVIDE AND CAULK AROUND ALL EQUIPMENT TO CREATE A CLEAN, TIGHT AND WATER PROOF SEAL.

DIVISION 8 – HOLLOW METAL DOORS & FRAMES

1. DOORS AND FRAMES SHALL BE SIZE AND TYPE AS INDICATED ON THE DOOR SCHEDULE. FIRE RATED DOORS, WHEN SPECIFIED, SHALL BEAR MANUFACTURES LABELS STATING TYPE OF RATING FOR THAT DOOR. ALL CLOSURES, GASKETS, ETC. SHALL BE PROVIDED ON RATED CLOSURES TO MAINTAIN THE ASSEMBLY RATING REQUIRED.

2. PROVIDE HOLLOW METAL DOOR CONSTRUCTED WITH THE FOLLOWING MATERIALS: – MINIMUM 18 GA. FOR FACE SHEETS OF INTERIOR DOORS – 16 GA. FOR EDGE CHANNELS. – MINIMUM 22 GA. FOR FACE STIFFENERS. – MINIMUM 16 GA. FOR INTERIOR FRAMES.

3. PROVIDE DOORS OF SIZES AND TYPES INDICATED ON DRAWINGS, FULLY WELDED SEAMLESS CONSTRUCTION WITH NO VISIBLE SEAMS OR JOINTS ON FACES OR VERTICAL EDGES; THICKNESSES AS SCHEDULED ON DRAWINGS.

4. FACE STIFFENERS, EDGES AND HARDWARE REINFORCEMENT SHALL BE THE HIGHEST QUALITY WORKMANSHIP AND MATERIALS. PROVIDE IN ACCORDANCE WITH BEST TRADE PRACTICE AND MANUFACTURER'S WRITTEN RECOMMENDATIONS FOR THE USE INTENDED.

5. PROVIDE CUSTOM MADE WELDED UNITS WITH INTEGRAL TRIM; SIZES AND SHAPES AS INDICATED ON DRAWINGS; FABRICATE UNITS SQUARE, TRUE AND FREE FROM DEFECTS.

6. HARDWARE REINFORCEMENT AND ANCHORS (ERECTION, FLOOR AND JAMB) SHALL BE AS REQUIRED FOR A SECURE INSTALLATION AND SHALL BE IN ACCORDANCE WITH TRADE REQUIREMENTS FOR THE SPECIFIED HARDWARE AND INTENDED USE.

7. AFTER FABRICATION, DRESS, FILL AND SAND EXPOSED SURFACES, BODY-PUTTY HOLES AND IMPERFECTIONS. APPLY UNIFORM COAT OF MANUFACTURER'S STANDARD PRIME COAT TO ALL EXPOSED SURFACES. LEAVE READY TO RECEIVE FINISH PAINTING.

DIVISION 8 – HOLLOW METAL DOORS & FRAMES CONTINUED

8. INSTALL FRAMES IN ACCURATE LOCATIONS AS INDICATED ON DRAWINGS. INSTALL RIGID, PLUMB, LEVEL AND TRUE. ALIGN WITH ADJACENT CONSTRUCTION. SECURE FLOOR ANCHORS TO FLOOR CONSTRUCTION WITH APPROVED TYPE MECHANICAL FASTENINGS; ANCHOR TO ADJOINING WALLS WITH SPECIFIED ANCHORS. BRACE FRAMES TO RETAIN POSITION AND CONTINUOUSLY CHECK ALIGNMENT DURING CONSTRUCTION OF ADJACENT WALLS. ADJUST FRAME LOCATIONS AS NECESSARY USING SHIMS BEFORE FASTENING. LEAVE READY TO RECEIVE SEALANT WHERE INDICATED ON DRAWINGS.

9. PREPARE DOORS FOR FINISH HARDWARE. OBTAIN TEMPLATES FROM HARDWARE MANUFACTURER AND CONFIRM TYPE, LOCATION, AND SPECIAL REQUIREMENTS OF HARDWARE FOR EACH DOOR PRIOR TO CUTTING.

10. HANG DOORS AS SCHEDULED ON DRAWINGS, IN ACCURATE LOCATIONS WITH 1/8" CLEARANCE AT TOPS AND 3/8" CLEARANCE AT BOTTOM, UNLESS SPECIFICALLY NOTED FOR "UNDERCUTS" OR OTHER DEVIATIONS IN FIT. VERIFY CLEARANCES REQUIRED FOR FLOORING AND MAKE NO JOB SITE FIT IN CUTS UNLESS APPROVED. HANG PAIRS OF DOORS AS SPECIFIED WITH 3/32" CLEARANCE AT MEETING EDGES. DEMONSTRATE THAT DOORS OPEN FREELY WITHOUT BINDING, AND WHEN CLOSED, WILL LATCH PROPERLY.

11. ACCESS DOORS: PROVIDE ACCESS DOORS BY MILCOR OR EQUAL. USE STYLE DW AT WALLS AND CEILINGS, (OR AS REQUIRED FOR RATING). SIZE AS INDICATED. FRAME SHALL BE GALVANIZED STEEL DRYWALL BEAD FOR FRAME CONCEALMENT. PANE. SHALL BE 14GA. STEEL WITH SPRINT TYPE CONCEALED HINGES OPENING TO 175 DEGREES. LOCKS SHALL BE FLUSH, SCREWDRIVER OPERATED WITH METAL CAM. PRIME COAT SHALL BE FACTORY APPLIED. COORDINATE INSTALLATION WITH REQUIREMENTS OF DOOR MANUFACTURER. ACCESS DOORS SHALL HAVE FIRE RATINGS THAT MATCH THE RATING OF WALLS IN WHICH THEY ARE INSTALLED.

HARDWARE

1. ALL FINISH HARDWARE FOR COMPLETE WORK SHALL BE FURNISHED AND INSTALLED IN ACCORDANCE WITH DRAWINGS AND SPECIFICATIONS. QUANTITIES LISTED IN ANY INSTANCE ARE FOR THE CONTRACTOR'S CONVENIENCE ONLY AND ARE NOT GUARANTEED. ITEMS NOT SPECIFICALLY MENTIONED BUT NECESSARY TO COMPLETE THE WORK FURNISHED, MATCHING IN QUALITY AND FINISHED, THE ITEMS SPECIFIED.

2. THE CONTRACTOR SHALL BE RESPONSIBLE FOR PROPER OPERATION AND FITTING OF HARDWARE IN LOCATIONS SPECIFIED. THE CONTRACTOR MUST SUPPLY A ROOM UNDER LOCK AND KEY TO STORE ALL FINISH HARDWARE UNTIL INSTALLATION IS MADE. THE HARDWARE SUPPLIER MUST MARK EACH ITEM OF HARDWARE AS TO DESCRIPTION AND LOCATION OF INSTALLATION IN ACCORDANCE WITH APPROVED HARDWARE SCHEDULE. EXPOSED SURFACES OF HARDWARE SHALL BE COVEREDAND WELL PROTECTED DURING INSTALLATION, SO AS TO AVOID DAMAGE TO FINISHES.

3. PROVIDE HARDWARE FOR FIRE-RATED OPENINGS IN COMPLIANCE WITH REQUIREMENTS OF NFPA 80. THIS REQUIREMENT TAKES PRECEDENCE OVER OTHER REQUIREMENTS FOR SUCH HARDWARE.

4. HARDWARE SUPPLIER WILL PROVIDE APPROVED SCHEDULED AND PAPER TEMPLATES TO VARIOUS OTHER SUPPLIERS FOR DOOR AND FRAME PREPARATION FOR HARDWARE.

5. EACH ITEM OF HARDWARE SHALL BE PACKAGED SEPARATELY WITH ALL NECESSARY SCREWS, BOLTS, TAMPINS, KEYS AND INSTALLATION TEMPLATES. DELIVER PACKAGES, CLEARLY IDENTIFIED, WITH HEADING NUMBER AS APPROVED ON HARDWARE SCHEDULE.

6. INSTALL EACH HARDWARE ITEM IN ACCORDANCE WITH THE MANUFACTURER'S WRITTEN INSTRUCTIONS AND RECOMMENDATIONS AND LOCATE IN ACCORDANCE WITH DHL RECOMMENDED LOCATIONS. SET ITEMS LEVEL, PLUMB AND TRUE TO LINE AND LOCATION. ADJUST AND REINFORCE THE ATTACHMENT SUBSTRATE, AS NECESSARY, FOR A SECURE INSTALLATION. SPACE FASTENERS AND ANCHORAGE AS INDICATED OR IN ACCORDANCE WITH INDUSTRY STANDARDS.

7. MAKE FINAL ADJUSTMENTS AND CHECK OF HARDWARE DURING THE WEEK IMMEDIATELY PRIOR TOACCEPTANCE. CLEAN AND LUBRICATE OPERATING ITEMS AS NECESSARY, TO RESTORE PROPER FUNCTIONING AND FINISH OF HARDWARE AND DOORS. MAKE FINAL ADJUSTMENT OF LOCKSETS AND THE CLOSURES TO COMPENSATE FOR OPERATION OF HEATING AND VENTILATION SYSTEMS UNDER THE SUPERVISION OF MANUFACTURER'S REPRESENTATIVE.

8. LUBRICATE ALL MOVING PARTS WITH GRAPHITE-TYPE LUBRICANT, UNLESS OTHERWISE RECOMMENDED BY MANUFACTURER. REPLACE ALL HARDWARE WHICH CANNOT BE LUBRICATED AND ADJUSTED TO OPERATE FREELY AND SMOOTHLY.

DIVISION 9 – FINISHES

METAL SUPPORT SYSTEM (WALL STUDS)

1. PROVIDE CHANNEL-SHAPED ROLL FORMED SHEET STEEL MEMBERS CONFORMING WITH ASTM C640, HOT DIPPED FINISH WHERE EXPOSED TO MOISTURE NOT LESS THAN 20 GAUGE. PROVIDE 16 GAUGE AT DOOR JAMBS.

2. PROVIDE COLD, ROLLED STEEL CHANNELS NOT LESS THAN 16 GAUGE.

3. PROVIDE ROLL HAT-SHAPED CHANNELS MINIMUM 25 GAUGE, 7/8" DEEP WITH 1/2" HEMMED EDGES. HOT DIPPED FINISH WHERE NOTED.

4. PROVIDE TIE WIRES OF GALVANIZED ANNEALED WIRES NOT LESS THAN 16 GAUGE.

5. PROVIDE GALVANIZED HANGERS OF STEEL WIRE IN ACCORDANCE WITH ASTM C754.

6. PROVIDE JACK STUDS BETWEEN BOTTOM TRACK AND WINDOW AND/OR RELIEF SILLS BETWEEN LINTELS AND HEADERS IN TOP TRACKS.

7. PROVIDE BLOCKING AND FRAMING FOR ALL WALL MOUNTED FINISH HARDWARE AND EQUIPMENT, INCLUDING DOOR STOPS.

8. PROVIDE DOUBLE BEAD OF BUTYL SEALANT AT FLOOR TRACKS. APPLY DOUBLE BEAD TO CEILING TRACK AND TO STUDS ABUTTING OTHER CONSTRUCTION. PROVIDE CHANNEL SHAPED BLOCKING SUPPORT OR GALVANIZED STRIP SUPPORT OF WALL-HUNG

9. CABINETS, EQUIPMENT, FIXTURES AND ACCESSORIES OF NOT LESS THAN 22 GA. MATERIAL. PROVIDE SUPPORT IN WALL OR PARTITION FRAMING SYSTEM WHEREVER WALL HUNG CABINETS AND EQUIPMENT ARE INDICATED ON DRAWINGS, AND WHERE REQUIRED FOR MOUNTING OF MISCELANEOUS ITEMS REQUIRING BACKING.

10. SET FLOOR TRACKS IN ACCURATE LOCATIONS AND SECURELY ANCHOR IN ACCORDANCE WITH ASTM STANDARDS. ERECT STUDS ON 16" OR 24" (AS INDICATED) CENTERS AND SECURE TO TRACK. INSTALL HEAD TRACK IN ACCORDANCE WITH DETAILS. INSTALL BLOCKING, BRACING, AND ANCHOR STRIPS; LEAVE READY TO RECEIVE FINISH MATERIALS.

11. ERECT ALL COMPONENTS FOR CEILING AND SOFFIT FRAMING IN ACCURATE LOCATIONS AS INDICATED, TRUE TO LINE, LEVEL AND PLUMB, AND IN ACCORDANCE WITH APPLICABLE ASTM STANDARDS AS REFERENCED ABOVE, USING A LASER LEVEL. ADJUST SUPPORTS, SPANS OR OTHERWISE FOR INSTALLATION WITHIN SPECIFIED TOLERANCES.

12. PROVIDE KICK BRACING IN ACCORDANCE WITH INDUSTRY STANDARDS FOR WALL STUDS, CEILING MEMBERS, DRAFT OR SMOKE STOPS AND CURTAIN WALLS.

GYPSUM WALL BOARD

1. PROVIDE GYPSUM WALL PANELS MANUFACTURED IN ACCORDANCE WITH REQUIREMENTS OF ASTM 336.

2. PROVIDE METAL EDGE AND CORNER BEADS AT ENDS, EDGES AND CORNERS.

3. WATER RESISTANT GYPSUM WALL BOARD SHALL BE 5/8" THICK TAPERED AND ROUNDED EDGES AND SHALL BE INSTALLED IN ALL WET AREAS AS INDICATED ON DRAWINGS.

4. PROVIDE FASTENERS IN ACCORDANCE WITH ASTM C646; UNLESS OTHERWISE NOTED OR INDICATED, PROVIDE TYPE 'S' BUGLE HEAD SCREWS FOR ATTACHMENT OF WALL BOARD TO METAL FRAMING, AND TYPE 'S' PAN HEAD SCREWS FOR ATTACHMENT OF FRAMING TO DOOR FRAMES.

5. PROVIDE ALL INCIDENTAL AND ACCESSORY MATERIALS, TOOLS, EQUIPMENT, AND METHODS REQUIRED FOR SATISFACTORY COMPLETION OF GYPSUM WALL BOARD CONSTRUCTION INCLUDING ACCESS DOORS AND PANELS.

6. APPLY CONTINUOUS BEAD SEALANT AT ALL JOINTS OF WALL BOARD ABUTTING ADJACENT CONSTRUCTION, INCLUDING AROUND FRAMED OPENINGS AND OTHER PROTRUSIONS THROUGH WALL BOARD WHERE SEALANT IS EXPOSED. PROVIDE POLYSULFIDE SEALANT; WHERE UNEXPOSED. PROVIDE ACOUSTIC SEALANT.

7. APPLY PRE-FILL COMPOUND TO JOINTS IN ACCORDANCE WITH INDUSTRY STANDARDS. APPLY EMBEDDING COMPOUND REINFORCING TAPE CENTERED OVER JOINT; APPLY SKIM COAT. AFTER TAPING AND EMBEDDING COMPOUND IS DRY, APPLY SECOND COAT FILLING AND TAPER FLUSH WITH SURFACE; FIRE TAPE PENETRATIONS AT DEMISING WALLS, CORRIDOR ENVELOPE AND OTHER RATED ASSEMBLIES.

8. PROVIDE FINAL FINISH THAT IS SMOOTH, WITHOUT DIVOTS, BUMPS, BOWS OR ANY OTHER SURFACE BLEMISH, READY TO RECEIVE PAINT. SMOOTH FINISH TYPICAL, U.N.O. ON PLANS

PAINTING

1. PROVIDE PAINT FINISHES FOR BUILDING AND OTHER SURFACES AS SCHEDULED ON DRAWINGS OR AS SPECIFIED HEREINAFTER INCLUDING SEALING OF CONCRETE FLOOR AT CORRIDOR AND STOCKROOM. NO PAINT FINISH IS REQUIRED ON ITEMS HAVING COMPLETE FACTORY FINISH, EXCEPT AS MAY BE SPECIFIED HEREINAFTER; PUTTY AND/OR SEALANT AT ALUMINUM WINDOWS; NONFERROUS METAL UNLESS SPECIFICALLY MENTIONED IN THE PAINTING SCHEDULE; STAINLESS STEEL; INTERIOR OR EXTERIOR OF EXISTING BUILDING, EXCEPT WHERE ALTERATIONS OCCUR OR WHERE SCHEDULED. PAINT GRILLES AND DIFFUSERS. NO PAINTING IS REQUIRED FOR INSULATING PIPING, EXCEPT WHERE EXPOSED IN FINISH, NON-MECHANICAL ROOM SPACES.

2. PROTECT WORK OF OTHER TRADES FROM DAMAGE AND DEFACEMENT CAUSED BY THIS WORK. REPAIR ANY DAMAGE CAUSED BY THE WORK OF THIS SECTION. REMOVE ELECTRICAL OUTLET AND SWITCH PLATES, MECHANICAL DIFFUSERS, GRILLES, ESCUTCHEONS, REGISTERS, SURFACE HARDWARE, FITTINGS, AND FASTENINGS PRIOR TO COMMENCING THE WORK. STORE, CLEAN, AND REPLACE UPON COMPLETION.

3. PAINT CONTRACTOR SHALL NOTIFY THE GENERAL CONTRACTOR IF ANY SURFACE TO BE PAINTED OR STAINED IS FOUND TO BE UNSUITABLE TO PRODUCE PROPER FINISH. APPLY NO FINISH MATERIAL UNTIL THE UNSUITABLE SURFACES HAVE BEEN MADE SATISFACTORY.

PAINTING CONTINUED

4. FINISH WORK SHALL BE UNIFORM, OF APPROVED COLOR, SMOOTH AND FREE FROM RUNS. MAKE ENDS OF PAINT ADJOINING OTHER MATERIALS OR COLORS SHARP AND CLEAN. WHERE HIGH GLOSS ENAMEL IS USED, LIGHTLY SAND UNDERCOAT TO OBTAIN A SMOOTH FINISH COAT.

5. PROVIDE ALL NEWLY PAINTED SURFACES WITH (1) COAT TINTED PRIMER AND A MINIMUM OF (2) COATS FINAL COLOR COAT, (UNLESS OTHERWISE RECOMMENDED BY MANUFACTURER'S SPECIFICATIONS) TO PROVIDE A SOLID, UNIFORM AND DURABLE FINISH. ALLOW PROPER DRYING TIME BETWEEN COATS.

6. DELIVER ALL PAINT TO JOB SITE IN UNOPENED CONTAINERS BEARING THE MANUFACTURER'S LABEL, AND SHOWING PAINT TYPE, SHEEN AND COLOR.

7. PAINT TYPES USED SHALL BE THOSE SPECIFICALLY RECOMMENDED BY THE MANUFACTURER FOR THE MATERIAL TO WHICH THEY WILL BE APPLIED. PAINTING CONTRACTOR SHALL FOLLOW MANUFACTURER'S INSTRUCTIONS FOR PROPER APPLICATION OF THE PAINT.

8. ALL SURFACES TO BE PAINTED SHALL BE THOROUGHLY CLEANED, AND PREPARED FOR PAINTING PRIOR TO APPLICATION OF PAINT. PROVIDE VENTILATORS AS REQUIRED TO PREVENT BUILDUP OF FUMES.

9. SANDPAPER ALL NEW WOOD TO SMOOTH AND EVEN SURFACE AND DUST OFF. AFTER PRIMING COAT HAS BEEN APPLIED, THOROUGHLY FILL ALL NAIL HOLES AND OTHER SURFACE IMPERFECTION'S WITH PUTTY TINTED WITH PRIMER OR STAIN TO MATCH WOOD COLOR. SAND ALL WOODWORK BETWEEN COATS TO A SMOOTH SURFACE.

10. PRIME ALL SURFACES WHICH RECEIVE PAINT PRIOR TO APPLICATION OF FINAL FINISH, IN ACCORDANCE WITH MANUFACTURER'S SPECIFICATIONS.

11. BACK PRIME ALL EXTERIOR AND INTERIOR WOOD AND TRIM PRIOR TO INSTALLATION. THOROUGHLY CLEAN SURFACES AND APPLY NO FINISH UNLESS SURFACES ARE DRY AND READY FOR APPLICATION. SANDPAPER SURFACES OF TRIM SMOOTH AND WIPE CLEAN. AFTER STAIN COAT HAS BEEN APPLIED, FILL CRACKS AND HOLES WITH PLASTIC WOOD OR PUTTY. IF STAIN HAS BEEN USED, TINT CRACK FILLER TO MATCH; PRIME BACKS OF TRIM. PRIME BARE WOOD SCHEDULED TO RECEIVE PAINT FINISH; FINISH NAIL HOLES, CRACKS, AND OTHER IMPERFECTIONS WITH PUTTY AND SAND SMOOTH.

12. AT COMPLETION, TOUCHUP AND RESTORE FINISH WHERE DAMAGED AND LEAVE ALL SURFACES IN GOOD AND CLEAN CONDITION. PROVIDE FOR ONE TOUCHUP TRIP FOR ENTIRE PROJECT PRIOR TO OPENING.

13. OTHER PAINT MANUFACTURER'S MAY NOT BE SUBSTITUTED.

14. FINISH INTERIOR SURFACES, AS SCHEDULED ON DRAWINGS, EXCEPT AS MODIFIED AND SUPPLEMENTED HEREINAFTER AND UPON WRITTEN OWNER APPROVAL. IN GENERAL, USE EGGSHELL SHEEN FOR WALL BOARD SURFACES; SEMI-GLOSS FOR HOLLOW METAL AND WOOD TRIM; AND FLAT FOR DUCTWORK.

TILE

1. INSTALL TILE IN AREAS INDICATED. USE ADHESIVES AND APPLY ONLY AS RECOMMENDED BY MANUFACTURER AND IN ACCORDANCE WITH INDUSTRY STANDARDS.

2. INSTALLERS MUST BE SPECIALISTS WITH A MINIMUM OF TWO (2) YEARS EXPERIENCE.

3. ALL INSTALLATION SHALL CONFORM TO THE LATEST APPLICABLE TILE COUNCIL OF AMERICA AND ANSI STANDARDS.

4. DO NOT COMMENCE INSTALLATION UNTIL SUBSTRATE HAS BEEN MADE SUITABLE FOR TILE INSTALLATION.

5. REVIEW ALL AREAS TO RECEIVE TILE FLOORING (PRIOR TO SUBMITTING ESTIMATE) TO DETERMINE THE REQUIRED EXTENT OF SUB FLOOR PREPARATION.

6. SET AND GROUT TILE WHEN AMBIENT TEMPERATURE IS AT LEAST 50° AND RISING. ALIGN ALL JOINTS AND CORNERS.

7. CLEAN METAL AND WOOD SURFACES AND CONCRETE FLOORS, REMOVING ALL FOREIGN MATTER AND CONTAMINANTS SUCH AS GREASE, OIL, DUST, WATER, SURFACE DIRT, OLD SEALANTS OR GLAZING COMPOUNDS, AND PROTECTIVE COATINGS. METAL SHALL BE CLEANED BY MECHANICAL OR SOLVENT PROCEDURES.

8. INSTALL TILE TO CONCRETE SUBSTRATE PER TCA STANDARD F113-89 WITH UNIFORMLY SPACED JOINTS, TO PATTERN INDICATED IN THE DRAWINGS. VERIFY LAYOUT AND CUTS WITH PROJECT MANAGER PRIOR TO COMMENCEMENT OF WORK. CUT TILE AT WALL INTERSECTIONS FOR CONCEALMENT BY BASE WHERE APPLICABLE. VARY MORTAR THICKNESS, AS NECESSARY, TO ACCOMMODATE VARIATIONS IN THE TILE THICKNESS.

9. CLOSE AREAS IN WHICH TILE IS BEING PLACED TO TRAFFIC AND OTHER WORK. KEEP AREA CLOSED UNTIL TILE IS FIRMLY SET. PROTECT FLOORING FROM DAMAGE. REPLACE DAMAGED TILE AT NO ADDITIONAL COST TO OWNER.

10. INSTALL TILE TO WOOD SURFACES AND ALUMINUM GLAZING CHANNEL AND METAL BASE WITH DOWN CORNING 795 SILICONE BUILDING SEALANT, BEADS AT 6" ON CENTER MAXIMUM.

11. GROUT FLUSH WITH TILE EDGES. WIPE TILES WITH SPONGE.

12. DAMP CURE PER MORTAR AND GROUT MANUFACTURER'S RECOMMENDATIONS.

13. SEAL TILE PER MANUFACTURER'S WRITTEN INSTRUCTIONS WITH SEALER RECOMMENDED FOR THE TILE INSTALLED. DOUBLE SEAL ALL JOINTS.

14. ALL WALL TILE TO BE GROUTED WITH EPOXY GROUT PROVIDED BY TILE SUB-CONTRACTOR.

15. ALL WALL TILES TO BE BUTT JOINTED.

16. FLOOR TILE GROUT JOINTS SHALL BE 3/16" (1/4" MAX.) UNLESS OTHERWISE NOTED ON DRAWINGS.

17. CONTRACTOR SHALL INSTALL ALL TILE AND GRANITE THROUGHOUT THE PROJECT.

FRP (FIBERGLASS REINFORCED PANELS) BOARD

1. ALL FRP PANELS SHALL BE FINISHED WHITE WHEN USED IN FOOD PREPARATION AREAS.

2. INSTALL PANELS TO WALLS USING MANUFACTURER'S RECOMMENDED ADHESIVE MATERIAL. EXTEND A MINIMUM OF 3" ABOVE FINISHED CEILING ELEVATION.

3. USE MATCHING COLOR TRIM SECTIONS AT ALL JOINTS AND BOTTOM EDGES. TRIM PIECES SHALL BE TERMINATED CLEANLY AT ACOUSTIC TILE WALL ANGLE. INSTALL SEALANT AT JOINT BETWEEN WALL BASE TRIM AND FRP TRIM.

4. SEAMS IN FRP PANELS SHALL BE KEPT TO A MINIMUM. NO HORIZONTAL JOINTS ALLOWED EXCEPT AT DISSIMILAR MATERIALS.

SUSPENDED ACOUSTICAL CEILING

1. SYSTEM COMPONENTS SHALL CONFORM TO ASTM C635 INTERMEDIATE DUTY AND UBC STANDARD 47-18 INTERMEDIATE DUTY. INSTALLATION OF SYSTEMS SHALL CONFORM TO ASTM C636, WITH A DEFLECTION OF NOT MORE THAN 1/360 OF THE SPAN.

FURNISH AND INSTALL ALL LABOR AND MATERIALS FOR COMPLETE ACOUSTICAL CEILING. REVIEW JOB SCHEDULE TO VERIFY INSTALLATION DATES AND MATERIAL AVAILABILITY.

2. COORDINATE ACOUSTICAL SUSPENSION SYSTEM WORK WITH OTHER WORK, SUCH AS CEILING LIGHT FIXTURES AND AIR OUTLETS. PROTECT FINISHED WORK INSTALLED BEFORE INSTALLATION OF ACOUSTICAL SUSPENSION SYSTEM. REPLACE WORK DAMAGED BY WORK UNDER THIS SECTION.

THE TENANT'S G.C. SHALL MAINTAIN FIRE AND SMOKE RATINGS AS REQUIRED BY CODES AND LANDLORD'S SPECIFICATIONS AND REGULATIONS.

3. ALL LOCKING CROSS TEES SUPPORTING OTHER CROSS TEES SHALL CONFORM TO THE SAME CLASSIFICATION AS THE MAIN RUNNERS. MAIN RUNNERS AND CROSS TEES SHALL BE COLD ROLLED ELECTRO-GALVANIZED STEEL. WALL ANGLE MOLDINGS SHALL BE COLD ROLLED ELECTRO-GALVANIZED STEEL. CORNERS SHALL BE MANUFACTURER'S PREFABRICATED INSIDE AND OUTSIDE CORNER MOLDINGS.

4. FINISH SHALL BE BAKED ENAMEL IN SELECTED COLOR.

5. HANGER WIRE SHALL BE 12 GAUGE GALVANIZED STEEL WIRE CONFORMING TO FS QQ-W-461, TYPE I.

6. INSPECT LOCATIONS TO RECEIVE WORK AND CHECK THE EXISTING DIMENSIONS. ASCERTAIN BEFORE PROCEEDING WITH WORK THAT ALL REQUIRED INSPECTIONS HAVE BEEN MADE. COMMENCEMENT OF WORK CONSTITUTES ACCEPTANCE OF RESPONSIBILITY RELATED TO GUARANTEE REQUIREMENTS.

THE BUILDING SHALL BE EXAMINED BEFORE BEGINNING WORK TO DETERMINE THAT IT IS PROPERLY ENCLOSED AND THE STRUCTURE IS IN PROPER CONDITION TO RECEIVE ACOUSTICAL MATERIALS.

THE AREA SHALL BE BROOM CLEANED AND UNINTERRUPTED FOR FREE MOVEMENT OF SCAFFOLDING. SCAFFOLDING SHALL BE OF A TYPE THAT WILL NOT SCAR OR MAR FLOOR SURFACES AND WILL NOT DAMAGE OTHER CONSTRUCTION. WORK NOT TO PROCEED UNTIL SATISFACTORY CONDITIONS DESCRIBED ABOVE PRESIDE.

7. ATTACH HANGER WIRE TO SOUND, SECURE STRUCTURAL MEMBERS CAPABLE OF CARRYING THE NEW LOAD WITHOUT DEFLECTION. WRAP, BOLT OR CLIP WIRE HANGERS TO STRUCTURAL STEEL MEMBERS, OR INSTALL DROP CLIPS ON STRUCTURAL STEEL MEMBERS AND TIE WIRE HANGERS TO DROP CLIPS.

INSTALL SUPPLEMENTARY FRAMING, BLOCKING AND BRACING WHERE NECESSARY TO SUSPEND CEILING SYSTEM FIXTURES AND EQUIPMENT AND WHERE SPACING OF STRUCTURAL SUPPORTS EXCEEDS SPECIFIED HANGER SPACING. WHERE DIRECT SUSPENSION OF SUPPLEMENTARY FRAMING FOR SUPPORT OF EQUIPMENT, FIXTURE OR DUCTWORK IS NOT POSSIBLE DUE TO OBSTRUCTIONS, SUPPLEMENTARY FRAMING MAY BE SUSPENDED BY "TRAPEZE" ARRANGEMENT OF HANGER WIRE. SUSPEND LIGHT FIXTURES FROM STRUCTURE BY ATTACHMENT OF ONE HANGER AT EACH CORNER OF THE FIXTURE.

FURNISH ADDITIONAL WIRES FOR LIGHTING FIXTURES AND MECHANICAL REGISTERS IN SUSPENDED CEILING. PROVIDE SEISMIC BRACING AS REQUIRED.

8. INSTALL CEILING SUSPENSION SYSTEM IN ACCORDANCE WITH ASTM C636. LOADING OF ANY COMPONENT MAY NOT CAUSE DEFLECTION OF MORE THAN 1/360 OF THE SPAN. USE LASER LIGHT FOR LAYOUT AND LEVELING.

INSTALL MAIN RUNNERS 48 INCHES O.C. TIE HANGER WIRES TO MAIN RUNNERS TIGHTLY WITH AT LEAST THREE FULL TURNS. INTERCONNECT MAIN RUNNERS BY LOCKING CROSS TEES 48 INCHES LONG TO FORM 24 INCH BY 48 INCH MODULES. WHEREVER SHOWN ON THE DESIGN PLANS, THESE MODULES SHALL BE DIVIDED BY CROSS TEES 24 INCHES LONG INSTALL PERPENDICULAR TO THE OTHER CROSS TEES TO FORM 24 INCH BY 24 INCH SECTIONS. PROPER LENGTH LOCKING CROSS TEES SHALL ALSO BE INSTALLED ADJACENT TO ALL SIDES OF RECESSED LIGHT FIXTURES NOT SUPPORTED BY A MAIN RUNNER.

9. ALL SUSPENDED CEILINGS SHALL BE BRACED TO RESIST LATERAL AND HORIZONTAL MOVEMENT AS SHOWN ON PLANS AND AS REQUIRED BY THE GOVERNING CODES. THE TENANT'S G.C. SHALL VERIFY ALL APPLICABLE CODES AND CONFORM.

This and all other project documents and all ideas, aesthetics and designs incorporated therein are instruments of service. All project documents are the registered property of Harbison International (HI) and cannot be lawfully used in whole or in part for any project or purpose except as described in the contractual agreement between HI and the Client. HI hereby gives formal notice that any such project document use, reproduction, or modification (misuse) is not only unlawful but also automatically binds all parties involved with misuse to fully indemnify and defend HI and HI's consultants to the maximum legal extent against all losses, demands, claims or liabilities arising directly or indirectly from project document misuse.

Project documents describe design intent of work and are not a representation of the as-built or existing conditions. HI and HI's consultants make no representations concerning the accuracy of documents and are not responsible for any discrepancies between project documents and the existing conditions.

REGISTERED PROFESSIONAL ENGINEER – DALE H WINN – No. 23273 – Exp. 12-31-11 – CIVIL – STATE OF CALIFORNIA

HARBISON INTERNATIONAL INC.
ENGINEERS – SURVEYORS – PLANNERS
2755 E. SHAW AVE., SUITE 101, FRESNO, CA 93710
PHONE: (559) 294-7485 FAX: (559) 294-7481

PRINCE TRUCK STOP
NWC OF STATE ROUTE 99 &
STATE ROUTE 166 (MARICOPA HWY)
BAKERSFIELD, CA 93313

REVISIONS		
No.	Date	Description
–	–	–
–	–	–
–	–	–
–	–	–
–	–	–
–	–	–
–	–	–

Drawn: DWD
Checked: MAH
Approved: MIKE A. HAMZY
Project No: 09-208
Date: 06/16/2011

Title: SPECS -

Sheet No. SP1

ACCESSIBILITY NOTES

IT IS THE RESPONSIBILITY OF THE TENANT FOR THIS NEW FACILITY TO COMPLY WITH THE CURRENT AMERICANS WITH DISABILITIES ACT (A.D.A.), STANDARDS FOR ACCESSIBILITY. THE EXISTING PRIMARY PATH OF TRAVEL, RESTROOM FACILITIES, DRINKING FOUNTAINS AND PUBLIC TELEPHONES ARE THE RESPONSIBILITY OF THE PROPERTY OWNERS FOR COMPLIANCE WITH THE CURRENT AMERICANS WITH DISABILITIES ACT (A.D.A.), STANDARDS FOR ACCESSIBILITY.

CORRIDORS / AISLES

EVERY CORRIDOR SERVING AN OCCUPANT LOAD OF 10 OR MORE SHALL BE NOT LESS THAN 44" IN WIDTH. CORRIDORS SERVING AN OCCUPANT LOAD OF LESS THAN 10 SHALL NOT BE LESS THAN 36" IN WIDTH. CIRCULATION AISLES AND PEDESTRIAN WAYS SHALL BE SIZED ACCORDING TO FUNCTIONAL REQUIREMENTS AND IN NO CASE SHALL BE LESS THAN 36" CLEAR WIDTH. EVERY PORTION OF EVERY BUILDING IN WHICH ARE INSTALLED SEATS, TABLES, EQUIPMENT OR SIMILAR MATERIALS SHALL BE PROVIDED WITH AISLES LEADING TO AN EXIT.

FLOORS / LEVELS

GROUND AND FLOOR SURFACES ALONG ACCESSIBLE ROUTES AND IN ACCESSIBLE ROOMS AND SPACES, INCLUDING FLOORS, WALKS, RAMPS, STAIRS, AND CURB RAMPS, SHALL BE STABLE, FIRM, AND SLIP RESISTANT. CHANGES IN LEVEL UP TO A 1/4" MAY BE VERTICAL AND WITHOUT EDGE TREATMENT. CHANGES IN LEVEL BETWEEN 1/4" AND 1/2" SHALL BE ACCOMPLISHED BY MEANS OF A RAMP NO STEEPER THAN 1 VERTICAL TO 2 HORIZONTAL. IF CARPET OR CARPET TILE IS USED ON A FLOOR SURFACE, IT SHALL BE SECURELY ATTACHED: HAVE A FIRM CUSHION, PAD OR BACKING OR NO CUSHION OR PAD: AND HAVE A LEVEL LOOP, TEXTURED LOOP, LEVEL CUT PILE , OR LEVEL CUT/UNCUT PILE TEXTURE. THE MAXIMUM PILE HEIGHT SHALL BE 1/2". EXPOSED EDGES OF CARPET SHALL BE FASTENED TO FLOOR SURFACES AND HAVE TRIM ALONG THE ENTIRE LENGTH OF THE EXPOSED EDGE. CARPET TRIM SHALL COMPLY WITH TITLE 24 REQUIREMENTS.

CONTROLS / OPERATING MECHANISMS

THE HIGHEST OPERABLE PART OF ALL CONTROLS, DISPENSERS, RECEPTACLES, AND OTHER OPERABLE EQUIPMENT SHALL BE PLACED WITHIN 48" OF THE FLOOR BUT NOT LOWER THAN 15" IF FORWARD APPROACHED AND WITHIN 54" BUT NOT LOWER THAN 9" IF SIDE APPROACHED.

CONTROLS AND OPERATING MECHANISMS SHALL BE OPERABLE WITH ONE HAND AND SHALL NOT REQUIRE TIGHT GRASPING, PUNCHING, OR TWISTING OF THE WRIST. THE FORCE REQUIRED TO ACTIVATE CONTROLS SHALL BE NO GREATER THAN 5 POUNDS OF FORCE.

FAUCET CONTROLS AND OPERATING MECHANISMS FOR KITCHEN SINKS SHALL BE OPERABLE WITH ONE HAND AND SHALL NOT REQUIRE GRASPING, PINCHING, OR TWISTING OF THE WRIST. THE FORCE REQUIRED TO ACTIVATE FAUCET CONTROLS AND OPERATING MECHANISMS FOR KITCHEN SINKS SHALL BE NO GREATER THAN 5 PLF. LEVER OPERATED, PUSH-TYPE, AND ELECTRONICALLY CONTROLLED MECHANISMS ARE EXAMPLES OF ACCEPTABLE DESIGNS. SELF-CLOSING VALVES ARE ALLOWED IF THE FAUCET REMAINS OPEN FOR AT LEAST 10 SECONDS.

HAZARDS / PROTRUDING OBJECTS

OBJECTS PROJECTING FROM WALLS WITH THEIR LEADING EDGES BETWEEN 27" AND 80" ABOVE THE FINISHED FLOOR SHALL PROTRUDE ANY AMOUNT NO MORE THAN 4" INTO WALKS, HALLS, CORRIDORS, PASSAGEWAYS, OR AISLES.

OBJECTS WITH THEIR LEADING EDGES AT OR BELOW 27" ABOVE THE FINISHED FLOOR MAY PROTRUDE ANY AMOUNT INTO WALKS, HALLS, CORRIDORS, PASSAGEWAYS OR AISLES.

FREE-STANDING OBJECTS MOUNTED ON POSTS OR PYLONS MAY OVERHANG 12" MAXIMUM FROM FROM 27" TO 80" ABOVE THE GROUND OR FINISHED FLOOR. PROTRUDING OBJECTS SHALL NOT REDUCE THE CLEAR WIDTH OF AN ACCESSIBLE ROUTE OR MANEUVERING SPACE.

WALKS, HALLS, CORRIDORS, PASSAGEWAYS, AISLES OR OTHER CIRCULATION SPACES SHALL HAVE 80" MINIMUM CLEAR HEAD ROOM.

ANY OBSTRUCTION THAT OVERHANGS A PEDESTRIAN WAY SHALL BE A MINIMUM OF 80" ABOVE THE WALKING SURFACE AS MEASURED FROM THE BOTTOM OF THE OBSTRUCTION.

SPACE ALLOWANCE / REACH RANGES

THE SPACE REQUIRED FOR A WHEELCHAIR TO MAKE A 180 DEGREE TURN IS A CLEAR SPACE OF 60" DIAMETER OR A T-SHAPED SPACE.

IF THE CLEAR FLOOR SPACE ONLY ALLOWS FORWARD APPROACH TO AN OBJECT, THE MAXIMUM HIGH FORWARD REACH ALLOWED SHALL BE 48". THE MINIMUM LOW FORWARD REACH IS 15". IF THE HIGH FORWARD REACH IS OVER AN OBSTRUCTION, REACH AND CLEARANCES SHALL BE PER CODE.

IF THE CLEAR FLOOR SPACE ALLOWS PARALLEL APPROACH BY A PERSON IN A WHEELCHAIR, THE MAXIMUM HIGH SIDE REACH ALLOWED SHALL BE 54" AND THE LOW SIDE REACH SHALL BE NO LESS THAN 9" ABOVE THE FLOOR AS SHOWN. IF THE SIDE REACH IS OVER AN OBSTRUCTION, THE REACH AND CLEARANCES SHALL BE PER CODE.

FIXED OR BUILT-IN SEATING, TABLES AND COUNTERS

WHERE FIXED OR BUILT-IN SEATING, TABLES, OR COUNTERS ARE PROVIDED FOR THE PUBLIC, AND IN GENERAL EMPLOYEE AREAS, 5%, BUT NEVER LESS THAN 1 MUST BE ACCESSIBLE, AS REQUIRED.

THE TOPS OF TABLES AND COUNTERS SHALL BE 28" TO 34" FROM THE FLOOR OR GROUND.

IF SEATING FOR PEOPLE IN WHEELCHAIRS IS PROVIDED AT FIXED TABLES OR COUNTERS, KNEE SPACES AT LEAST 27" HIGH, 30" WIDE, AND 19" DEEP SHALL BE PROVIDED.

IF SEATING SPACES FOR PEOPLE IN WHEELCHAIRS ARE PROVIDED AT FIXED TABLES OR COUNTERS, CLEAR FLOOR SPACE SHALL BE PROVIDED. SUCH CLEAR FLOOR SPACE SHALL NOT OVERLAP KNEE SPACE BY MORE THAN 19".

WHERE A SINGLE COUNTER CONTAINS MORE THAN ONE TRANSACTION STATION, SUCH AS A BANK COUNTER WITH MULTIPLE TELLER WINDOWS OR A RETAIL SALES COUNTER WITH MULTIPLE CASH REGISTER STATIONS, AT LEAST 5%, BUT NEVER LESS THAN 1, OF EACH TYPE OF STATION SHALL BE LOCATED AT A SECTION OF COUNTER THAT IS AT LEAST 36" LONG AND NO MORE THAN 28" TO 34" HIGH.

SIGNS / IDENTIFICATION

THE INTERNATIONAL SYMBOL OF ACCESSIBILITY SHALL CONSIST OF A WHITE FIGURE ON A BLUE BACKGROUND. THE BLUE SHALL BE EQUAL TO COLOR NO. 15090 IN FEDERAL STANDARD 599B.

LETTERS AND NUMBERS ON SIGNS SHALL HAVE A WIDTH-TO-HEIGHT RATIO OF BETWEEN 3:5 AND 1:1 AND A STROKE WIDTH TO HEIGHT RATIO BETWEEN 1:5 AND 1:10. CHARACTERS AND NUMBERS ON SIGNS SHALL BE SIZED ACCORDING TO THE VIEWING DISTANCE FROM WHICH THEY ARE TO BE READ. THE MINIMUM HEIGHT IS MEASURED USING AN UPPER CASE X. LOWER CASE CHARACTERS ARE PERMITTED. FOR SIGNS SUSPENDED OR PROJECTED ABOVE THE FINISH FLOOR, THE MINIMUM CHARACTER HEIGHT SHALL BE 3". CHARACTERS AND SYMBOLS SHALL CONTRAST WITH THEIR BACKGROUND, EITHER LIGHT CHARACTERS ON A DARK BACKGROUND OR DARK CHARACTERS ON A LIGHT BACKGROUND. ALL BUILDING ENTRANCES THAT ARE ACCESSIBLE TO AND USABLE BY PERSONS WITH DISABILITIES AND AT EVERY MAJOR JUNCTION ALONG OR LEADING TO AN ACCESSIBLE ROUTE OF TRAVEL SHALL BE IDENTIFIED WITH A SIGN DISPLAYING THE INTERNATIONAL SYMBOL OF ACCESSIBILITY AND WITH ADDITIONAL DIRECTIONAL SIGNS, AS REQUIRED, TO BE VSIBLE TO PERSONS ALONG APPROACHING PEDESTRIAN WAYS.

ELECTRICAL

THE CENTER OF THE ELECTRICAL AND COMMUNICATION RECEPTACLE OUTLETS SHALL BE INSTALLED NOT LESS THAN 15" ABOVE THE FLOOR OR WORKING PLATFORM. THE CENTER GRIP OF THE OPERATING HANDLE OF CONTROLS OR SWITCHES INTENDED TO BE USED BY THE OCCUPANT OF THE ROOM OR AREA TO CONTROL LIGHTING AND RECEPTACLE OUTLETS, APPLIANCES, OR COOLING, HEATING, AND VENTILATING EQUIPMENT SHALL NOT BE MORE THAN 48" ABOVE THE FLOOR OR WORKING PLATFORM. THE CENTER OF THE FIRE ALARM INITIATING DEVICES (PULL STATIONS) SHALL BE LOCATED 48" ABOVE THE LEVEL OF THE FLOOR, WORKING PLATFORM, GROUND SURFACE, OR SIDEWALK. THE INSTALLATION OF FIRE ALARM EQUIPMENT AND SYSTEMS IN ANY OCCUPANCY WITHIN THE SCOPE OF THESE REGULATIONS SHALL BE IN ACCORDANCE WITH THE PROVISIONS OF THE LOCAL JURISDICTION'S FIRE CODE.

SPECIFICATIONS (CONT.)

10. SUSPENDED ACOUSTICAL CEILING CONTINUED FROM SP-1

CUT TILES TO MATCH FIELD PATTERN RECESS. ANY ACOUSTICAL CEILING PANELS LESS THAN FULL SIZE SHALL HAVE CUT EDGES TRIMMED TO MATCH FACTORY TEGULAR EDGES. SUSPENDED CEILING SHALL INTERSECT ALL VERTICAL WALLS AT 90°UNLESS OTHERWISE NOTED.

11. UPON COMPLETION OF WORK FOLLOWING INSTALLATION OF SUSPENSION SYSTEMS, DIRTY OR DISCOLORED SURFACES OF SUSPENSION COMPONENTS SHALL BE CLEANED IN ACCORDANCE WITH MANUFACTURER'S RECOMMENDATIONS AND LEFT FREE FROM DEFECTS. COMPONENTS THAT ARE DAMAGED OR IMPROPERLY INSTALLED BE REMOVED AND REPLACED WITHOUT ADDITIONAL COST TO THE OWNER.

12. LEAVE FOUR, FULL, UNDAMAGED TILES AT JOBSITE.

13. ALL CEILING TILES IN FOOD PREPARATION AREAS, KITCHENS, ETC. SHALL BE OF A LIGHT COLOR AND WITH SMOOTH, WASHABLE SURFACE. SEE CEILING TYPE SCHEDULE AND KITCHEN DRAWINGS IN THIS SET.

DIVISION 10 - SPECIALTIES

1. FIRE EXTINGUISHERS (PROVIDED BY G.C.) - EXTINGUISHERS SHALL BE 10-POUND CAPACITY, U.L. LABELED, ENAMEL, STEEL CONTAINER WITH PRESSURE INDICATING GAUGE FOR CLASS A, B, OR C FIRES.

2. INSTALL ON WALL MOUNTED HOOKS AS INDICATED OR DIRECTED BY THE FIRE MARSHALL, NEATLY FITTING TO FINISH SURFACES. PLACE FULLY CHARGED EXTINGUISHERS ON HOOKS PRIOR TO OCCUPANCY.

3. SEE FIXTURE PLAN FOR ARCHITECTS SUGGESTED LOCATIONS.

POS SYSTEMS

1. ALL POS SYSTEM CABLES SHALL BE RUN IN CONDUITS WHEN IN CEILING AREAS.

2. ALL CABLES FOR POS SYSTEMS SHALL BE OF THE APPROPRIATE GAUGE FOR THE LENGTH OF THE RUN.

3. COORDINATE INSTALLATION OF POS SYSTEMS WITH OWNER TO ALLOW APPROPRIATE AMOUNT OF TIME FOR EMPLOYEE TRAINING.

4. ALL CASH DRAWERS SHALL BE MOUNTED UNDER THE SERVICE COUNTER. SEE DETAILS.

5. SYSTEMS SHALL BE SUPPLIED AND INSTALLED COMPLETE WITH ALL NECESSARY HARDWARE AND ACCESSORIES TO COMPLETE THE INSTALLATION.

6. GANG ALL LOOSE CABLES AND SECURE NEATLY TO ADJACENT SURFACE WITH CABLE TIES. LOOSE UNORGANIZED CABLING AND HOOK-UPS ARE NOT ACCEPTABLE.

MENU BOARDS

1. THE GENERAL CONTRACTOR SHALL COORDINATE THE MENU BOARD INSTALLATION WITH THE ARCHITECT.

2. ANY MENU BOARDS THAT ARE ILLUMINATED SHALL BEAR A U.L. LABEL WHEN REQUIRED BY CITY, STATE, NATIONAL OR OTHER GOVERNING CODES.

3. NO MANUFACTURES LABELS MAY BE EXPOSED.

SIGNAGE

1. THE SIGN CONTRACTOR SHALL PREPARE SHOP DRAWINGS FOR ALL PRIMARY SIGNAGE AND SUBMIT TO ALL REQUIRED AUTHORITIES AND GAIN APPROVAL IN WRITING PRIOR TO FABRICATION OR INSTALLATION.

2. SIGNS SHALL HAVE NO EXPOSED MANUFACTURERS LABELS

3. SIGNS ARE SUPPLIED AND INSTALLED BY THE OWNERS SEPARATE SOURCE. THE TENANTS G.C. SHALL SUPPLY POWER & THE REQUIRED DISCONNECTS, TIME CLOCKS, ETC. COORDINATE WITH SIGN MANUFACTURER.

GENERAL NOTES

F. STUD-TO-SLAB FASTENERS SHALL BE "HILTI" BRAND DN OR DS SERIES, POWDER ACTUATED FASTENERS, PER ICBO #2388 OR EQUAL

G. STUD-TO-STUD, TO EXIST. STRUCTURE FASTENERS SHALL BE "I.T.W. BUILDEX" SELF-TAPING SCREWS

H. PROVIDE 5/8" WATER RESISTANT GYPSUM BOARD AT ALL WET AREAS AS INDICATED ON DRAWINGS. TAPE, SEAL AND PREP TO ACCEPT FINISH.

I. PROVIDE SQUARE CORNER BEAD AT ALL OUTSIDE CORNERS IN PUBLIC AREA UNLESS NOTED ELSEWHERE IN THESE DRAWINGS.

J. GENERAL CONTRACTOR TO PREPARE EXISTING SURFACES TO EXCEPT NEW FINISHES AS REQUIRED.

K. GENERAL CONTRACTOR TO ASSEMBLE STANDARD TUBE OF COMPLETED AS BUILT DRAWINGS AND LEAVE IN STORE MANAGERS OFFICE UPON COMPLETION OF CONSTRUCTION.

This and all other project documents and all ideas, aesthetics and designs incorporated therein are instruments of service. All project documents are the registered property of Harbison International (HI) and cannot be lawfully used in whole or in part for any project or purpose except as described in the contractual agreement between HI and the Client. HI hereby gives formal notice that any such project document use, reproduction, or modification (misuse) is not only unlawful but also automatically binds all parties involved with misuse to fully indemnify and defend HI and HI's consultants to the maximum legal extent against all losses, demands, claims or liabilities arising directly or indirectly from project document misuse.

Project documents describe design intent of work and are not a representation of the as-built or existing conditions. HI and HI's consultants make no representations concerning the accuracy of documents and are not responsible for any discrepancies between project documents and the existing conditions.

REGISTERED PROFESSIONAL ENGINEER
DALE H WINN
No. 23273
Exp. 12-31-11
CIVIL
STATE OF CALIFORNIA

HARBISON INTERNATIONAL INC.
ENGINEERS - SURVEYORS - PLANNERS
2755 E. SHAW AVE., SUITE 101, FRESNO, CA 93710
PHONE: (559) 294-7485 FAX: (559) 294-7481

PRINCE TRUCK STOP
NWC OF STATE ROUTE 99 &
STATE ROUTE 166 (MARICOPA HWY)
BAKERSFIELD, CA 93313

REVISIONS

No.	Date	Description
-	-	-
-	-	-
-	-	-
-	-	-
-	-	-
-	-	-
-	-	-

Drawn: DWD
Checked: MAH
Approved: MIKE A. HAMZY
Project No: 09-208
Date: 06/16/2011

Title: SPECS NOTES

Sheet No. SP2

DOOR NOTES

1. STRAIGHT DEADBOLTS SHALL HAVE A MINIMUM THROW OF 1" AND AN EMBEDIMENT OF NOT LESS THAN 5/8".

2. HOOK-SHAPED OR EXPANDING LUG DEADBOLTS SHALL HAVE A MINIMUM THROW OF 3/4".

3. EXIT HARDWARE:
ALL EXITS SHALL BE OPERABLE FROM THE INTERIOR OF TENANT'S SPACE WITHOUT THE USE OF A KEY OR SPECIAL KNOWLEDGE. NO MANUALLY OPERATED\ EDGE OR SURFACE BOLTS SHALL BE USED.

4. MAXIMUM PULL FORCES FOR INTERIOR AND EXTERIOR DOORS SHALL BE:
INTERIOR DOORS = 5.0 LBS. FORCE
EXTERIOR DOORS = 7.5 LBS FORCE

5. ALL DOOR HARDWARE SHALL HAVE A SATIN ALUMINUM FINISH.

6. EXIT DOORS SHALL SWING IN DIRECTION OF EXIT TRAVEL WHEN SERVING ANY HAZARDOUS AREA OR WHEN SERVING AN OCCUPANT LOAD OF 50 OR MORE.

7. EXIT DOORS SHALL BE OPENABLE FROM THE INSIDE WITHOUT THE USE OF A KEY OR ANY SPECIAL KNOWLEDGE OR EFFORT.

8. WIDTH AND HEIGHT OF REQUIRED EXIT DOORWAYS TO COMPLY WITH UBC SECTION 1003.

9. ALL CORRIDOR OPENINGS SHALL MEET THE REQUIREMENTS OF UBS SECTION 1005-H INCLUDING STEEL FRAME, 20 MIN. LABELED DOORS, HINGES, LATCHING DEVICES AND CLOSERS.

10. ANY LANDING AT AN EXIT DOOR MUST NOT BE MORE THAN 1/2" BELOW THE DOOR THRESHOLD.

11. PROVIDE LEVER HARDWARE AT ALL HANDICAPPED ACCESSIBLE DOORS.

12. ALL OPENINGS SHALL BE SCREENED EXCEPT WHERE SELF CLOSING DOORS ARE PROVIDED. SCREEN DOORS SHALL BE SELF CLOSING.

13. ALL DOOR AND SIDELIGHT GLAZING SHALL COMPLY WITH UBC 2406.4.

14. ALL EXTERIOR EXIT DOORS TO HAVE A "DOOR TO REMAIN UNLOCKED DURING BUSINESS HOURS" SIGN PER UBC 1003.3.1.8.

DOOR TYPES

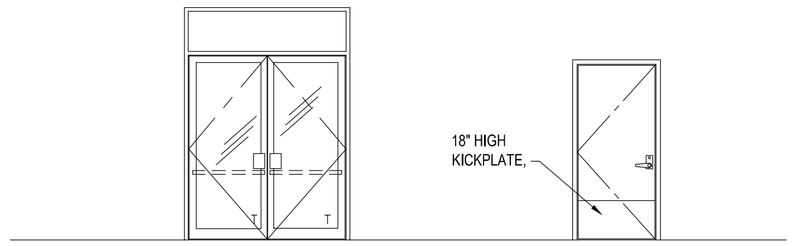

DOOR SCHEDULE

DOOR NO.	TYPE	DESCRIPTION
1 2	A	PAIR 3'-0" X 7'-0" ALUMINUM AND TEMPERED GLASS STOREFRONT DOORS.
3 4	C	3'-0" X 6'-8" HOLLOW METAL DOOR AND FRAME WITH SECURITY PEEP HOLE
5	D	DOOR: 3'-0" X 6'-8" X 1-3/4" SOLID CORE WOOD DOOR. FRAME: TIMELY PRE-FINISHED BLACK FRAMES OR EQUAL
6 7 8 9 10	D	DOOR: 3'-0" X 6'-8" X 1-3/4" SOLID CORE WOOD DOOR. FRAME: TIMELY PRE-FINISHED BLACK FRAMES OR EQUAL DOOR STOP: "GLYNN-JOHNSON" MODEL NO. 60W WALL MOUNTED KICKPLATE: 18" .050 STAINLESS STEEL TEXTURED FINISH ON BOTH SIDES OF DOOR

FINISH SCHEDULE

ROOM FINISH SCHEDULE:

SPACE	FLOOR	BASE	WALLS	CEILING		REMARKS
SALES 1	FF-1	B-1	WF-1	CF-3		-
WALK-IN COOLER/ FREEZER 2 / 6	MFG	MFG	MFG	MFG		-
RESTROOMS 3 4	FF-1	B-3	WF-2	CF-2		-
STORAGE 5	FF-1	B-1	WF-1	CF-3		-
ELECTRIC 7	FF-2	B-2	WF-1	CF-3		-
JANITOR 8	FF-2	B-2	WF-1	CF-3		-
PREP 9	FF-1	B-1	WF-3	CF-3		-
OFFICE 10	FF-1	B-1	WF-1	CF-3		-
FUTURE 11	N/A	N/A	N/A	N/A		-

MATERIAL SCHEDULE

MATERIAL	DESCRIPTION	
FLOORING		
FF-1	12" X 12" CERAMIC FLOOR TILE (OWNER-SELECT)	
FF-2	CONCRETE WITH APPROVED CLEAR SEALER	
WALLBASE		
B-1	COUNTY HEALTH DEPT APPROVED 6X6 TILE W/ 3/4" RADIUS COVE - TO MATCH FLOOR TILE	
B-2	NO BASE USED	
WALL FINISH		
WF-1	PAINTED SMOOTH FINISH 5/8" GYP BOARD	
WF-2	CERAMIC TILE OVER 1/2" DUROCK OR EQUAL TILE BACKER BOARD.	
WF-3	MARLITE FRP PANELS TO 6'-0" - PAINTED SMOOTH FINISH ABOVE	
CEILING FINISHES		
CF-1	US GYPSUM VINYL ROCK 24" X 48" SUSPENDED ACOUSTIC CEILING	
CF-2	PAINTED SMOOTH FINISH 5/8" GYP BD	
CF-3	24" X 48" SUSPENDED ACOUSTIC CEILING	

This and all other project documents and all ideas, aesthetics and designs incorporated herein are exclusive property of Harbison International (HI) and cannot be used in whole or in part for any project or purpose except as described in the contractual agreement between HI and the Client. HI retains all rights under statutory and common law, including all copyright laws. Reproduction (manual or by any other means) of these documents or designs in any form without prior written permission of HI is prohibited. The Client agrees to indemnify and hold harmless HI and its consultants from any unauthorized use. The Client agrees to fully indemnify and defend HI and HI's consultants to the maximum legal extent against all losses, damages, claims or liabilities arising directly or indirectly from project document misuse.

Project documents describe design intent of work, and are not a representation of the final as-built conditions. HI and its consultants shall not be responsible for any discrepancies concerning the accuracy of documents and are not responsible for any discrepancies between project documents and the existing conditions.

REGISTERED PROFESSIONAL ENGINEER
DALE H WINN
No. 23273
Exp. 12-31-11
CIVIL
STATE OF CALIFORNIA

HARBISON INTERNATIONAL INC.
ENGINEERS - SURVEYORS - PLANNERS
2755 E. SHAW AVE., SUITE 101, FRESNO, CA 93710
PHONE: (559) 294-7485 FAX: (559) 294-7481

PRINCE TRUCK STOP
NWC OF STATE ROUTE 99 &
STATE ROUTE 166 (MARICOPA HWY)
BAKERSFIELD, CA 93313

REVISIONS

No.	Date	Description

Drawn: DWD
Checked: MAH
Approved: MIKE A. HAMZY

Project No: 09-208
Date: 06/16/2011

Title
SCHEDULES
-

Sheet No.
SP3